azbil

No. CP-SP-1380E

AUR890
Burner Controller
User's Manual

Thank you for purchasing the AUR890. This manual contains information for ensuring the correct use of the AUR890.

This manual should be read by those who design and maintain equipment that uses the AUR890.

It also provides necessary information for installation, maintenance, and troubleshooting. Be sure to keep this manual nearby for handy reference.

Azbil Corporation

NOTICE

Be sure that the user receives this manual before the product is used.

Copying or duplicating this user's manual in part or in whole is forbidden. The information and specifications in this manual are subject to change without notice.

Considerable effort has been made to ensure that this manual is free from inaccuracies and omissions. If you should find an error or omission, please contact Azbil Corporation.

In no event is Azbil Corporation liable to anyone for any indirect, special or consequential damages as a result of using this product.

© 2015 Azbil Corporation All Rights Reserved.

Conventions Used in This Manual

■ To prevent injury to the operator and others, and to prevent property damage, the following types of safety precautions are indicated:

⚠WARNING	Warnings are indicated when mishandling this product might result in death or serious injury.
⚠CAUTION	Cautions are indicated when mishandling this product might result in minor injury to the user, or physical damage to the product.

■ In describing the product, this manual uses the icons and conventions listed below.

⚠	Use caution when handling the product.
⃠	The indicated action is prohibited.
❗	Be sure to follow the indicated instructions.
Handling Precautions:	Handling Precautions indicate items that the user should pay attention to when handling this module.
Note:	Notes indicate information that might benefit the user.
☞	This indicates the item or page that the user is requested to refer to.
(1)(2)(3)	Numbers within parentheses indicate steps in a sequence or parts of an explanation.

Safety Precautions

⚠WARNING

!	Use this device with combustion equipment that is started and stopped at least once in a 24-hour period.
⊘	This device cannot be used for equipment with combustion continuing for 24 hours or longer.
!	Implement a safety design for the prepurge and external timer circuits, taking into account the safety guidelines for the equipment. An explosion can occur if this device is turned on without carrying out a prepurge. This device does not have a prepurge function.
!	To connect this device to the power supply, connect the high potential side (L1) to terminal 2*1 and the low potential side (L2(N)) to terminal 3.*2 Use a circuit to which power is constantly supplied after the non-fuse circuit breaker (or power switch) is turned on. *1. Terminal 1 if the replacement base unit (Q890A100) is used *2. Terminal 2 if the replacement base unit (Q890A100) is used
⊘	Do not use a circuit that has a start input between the non-fuse circuit breaker (or power switch) and terminal 2 or 3*3 of this device. *3. Between the circuit breaker (or power switch) and terminal 1 or 2 if the replacement base unit (Q890A100) is used.
!	Connect the load (ignition transformer, solenoid valve, etc.) directly to the output terminals of this device. If it is not directly connected, combustion safety cannot be ensured.
⊘	The ignition time for the pilot and main burners should not exceed the time defined by the burner or device manufacturer. If it does, fuel will accumulate in the combustion chamber and form an explosive mixture, resulting in a very dangerous situation in which an explosion could occur.
!	Ensure you turn off the power of this device and all auxiliary devices when mounting, removing or connecting the wires of this device. There is a risk of electrical shock.
!	If the system is locked out, do not reset it until the cause of the problem has been eliminated.
⊘	Do not allow multiple repeated resets. Mishandling in this way can cause a serious combustion equipment accident.
⊘	Do not connect the solenoid valve to the high potential side (L1). If it is connected to L1 and a ground fault occurs, current can leak to the solenoid valve and open it, allowing fuel to flow out, regardless of the status of the burner controller.
!	This device has functions that are extremely important for the safe operation of combustion equipment. Use it correctly in accordance with the user's manual.
!	Check the model number carefully and check that the sequence timing is as specified by the combustion equipment manufacturer. Installing an incorrect model can result in an explosion hazard.
✋	Terminal 14 (F) retains an electrical charge even after the power is turned off. Do not touch terminal 14 (F) even after turning the power off. Doing so may result in an electric shock.
⊘	Do not start regular operation of equipment without first completing the trail-run adjustments for this device, as well as the tests specified by the equipment manufacturer.
⊘	Do not disassemble this device. Doing so may cause malfunction, device failure, or electric shock.

⚠WARNING

	Do not use alarm relay output as safety output.
	This device has a limited product life. Beyond the product life, the risk of device failure becomes higher. Replace this device within its product life.

⚠CAUTION

	To ensure proper operation of this device, follow the directions given in this user's manual and in the manuals for the combustion equipment and for any other devices that are used. When planning a combustion safety control system, please discuss the details with our sales representatives.
	Mounting, wiring, maintenance, inspection, calibration, etc. should be carried out by a professional with technical training in combustion systems and flame safeguard control devices.
	Use this device correctly within the range of the rated specifications stated in the user’s manual. Not doing so may cause device failure or malfunction.
	Make sure that the flame detector does not detect the ignition spark. If the flame detector can detect the spark, change the detector's line of sight or change the ignition electrode's position.
	Do not install where exposed to any of the following: • Certain chemicals or corrosive gases (ammonia, sulfur, chlorine, ethylene compounds, acids, etc.) • Dripping water or excessive humidity • High temperatures • Sustained long-term vibration
	For mounting and wiring, follow the instructions in this user's manual or in the combustion equipment manufacturer's manual.
	Connections to this device should comply with the standards for wires and wiring methods that are specified in the user's manual. Otherwise, the device may fail or malfunction.
	For maintenance and inspection methods, replacement cycle, etc., follow the specifications in this user's manual.
	When discarding this product, dispose of it as industrial waste, following local regulations.
	This device's load-control line is equipped with a fuse. Do not short-circuit the load, or the fuse will blow. If the fuse blows, replace this device.
	Do not design instrumentation that shuts off the power to this device as soon as alarm output is generated. Doing so can corrupt this device’s operation history records.

Contents

Conventions Used in This Manual
Safety Precautions

Chapter 1. Overview

■ Features 1
■ System configuration 1
■ Ensuring safety 1
■ Instructions for proper use 2
■ Precautions on facility design 2
■ Most important points for ensuring safety 2
● Precautions for instrumentation 2
■ Model number 3
■ Related equipment 3
● Compatible flame detector (sold separately) 3
● Optional parts (sold separately) 3

Chapter 2. Installation, Wiring

■ Installation, Precautions for wiring 4
■ Installation method 5
■ Cautions regarding installation 6
■ When the sub-base (BC-R05A100) is used 7
● Installation orientation 7
● DIN rail mounting 7
● Mounting in a panel 7
● Mounting/removing the device and sub-base (sold separately) 8
■ When the base unit (Q890A100) for RA890 replacement is used 9
● Installation orientation 9
● Mounting in a panel 9
■ Terminal numbers, front panel item names 11
● Terminal No. 11
● Connector for front wiring (81447514-001) terminal layout 12
● Connector for front wiring (for right side wiring) (81447514-002) terminal layout 12
● External connection terminals of the RA890 replacement base unit (Q890A100) 13
■ Example of wiring connection with external device 14
● When the BC-R05A100 sub-base is used
(terminals 1–24 are on sub-base, 25–35 on front connector) 14
● Q890A100 base unit for RA890-AUR890 replacement 16
● Wiring to a flame detector (UV sensor) 18
● Wiring to a rectification flame rod 18
● Example countermeasures against power surges caused by lightning 19
● Connections to solenoid valve 20

Chapter 3. Operation

■ Part names 21
■ Operation 21
● Reset switch 21
● DISP switch 21

Chapter 4. Explanation of Operation

■ Example of wiring connection with external device: Internal block diagram 23
● When the BC-R05A100 sub-base is used (terminals 1–24 are on sub-base, 25–35 on front connector) 23
● Q890A100 base unit for RA890-AUR890 replacement.....25
■ Example sequence 27
● Normal operation (Non-recycling gas-fired combustion) 27
● Operation when an ignition failure occurs (Non-recycling gas-fired combustion) ...28
● Operation when a flame failure occurs (Non-recycling gas-fired combustion) ...29
● Operation when there is a false flame before start input (Non-recycling gas-fired combustion) 30
● Normal operation (Non-recycling oil-fired combustion (2-level combustion)) ...31
● Operation when an ignition failure occurs (Non-recycling oil-fired combustion (2-level combustion)) 32
● Operation when a flame failure occurs (Non-recycling oil-fired combustion (2-level combustion)) 33
● Operation when there is a false flame before start input (Non-recycling oil-fired combustion (2-level combustion)) 34

Chapter 5. Trial Operation and Adjustment

■ Preliminary inspection 35
■ Inspection procedure 35
■ Ignition spark response (UV sensor) 36
■ Measurement of flame voltage 37
● Measurement method for flame voltage 38
● Checking ignition time in a case where it is configured with an external timer ...38
■ Pilot turn-down test 39
■ Safety shutoff check 40

Chapter 6. Maintenance and Inspection

■ General maintenance and inspection 41
■ Maintenance and inspection cycle 41
■ Alarm codes and details 42
■ Failure inspection flow 43

Chapter 7. Specifications

■ External dimensions 46
● AUR890 with the BC-R05A100 sub-base 46
● When combined with the Q890A100 base unit for RA890-AUR890 replacement ...48

Chapter 1. Overview

AUR890 burner controllers were developed as an upgrade for the RA890 burner controller, and are designed for batch operation of combustion equipment (at least one start and stop in a 24-hour period). This device is used in combination with an AUD100 series Advanced Ultraviolet Flame Detector or a flame rod.

For combustion equipment that operates continually for 24 hours, use a burner controller designed for continuous operation instead of this device.

This device is structured for external instrumentation of the pre-purge function. It automatically ignites the pilot and main burners and monitors the flame. In addition, when flame failure occurs, this device locks out the combustion equipment.

■ Features

- 7-segment display for sequence codes and alarm codes.
- LED indicators show whether there is a flame signal and whether lock-out is present.
- The product is designed so that it cannot be restarted in the case of lock-out due to ignition failure, false flame or other causes, unless it is reset manually.
- If there is a false flame signal during startup, the controller will be locked out.
- Perform fault diagnosis for the internal control relay circuit.
- A base unit, Q890A100, is available for use when replacing the RA890. Attach the cables that were connected to the Q270A1024 sub-base of the RA890 to the new base unit. The terminals have the same numbers to facilitate upgrading from RA890 to AUR890.

■ System configuration

The facilities that use the combustion safety device must be designed taking into careful consideration the following safety guidelines and the like.

If the system is designed to a foreign specification, refer to laws and standards in the relevant country.

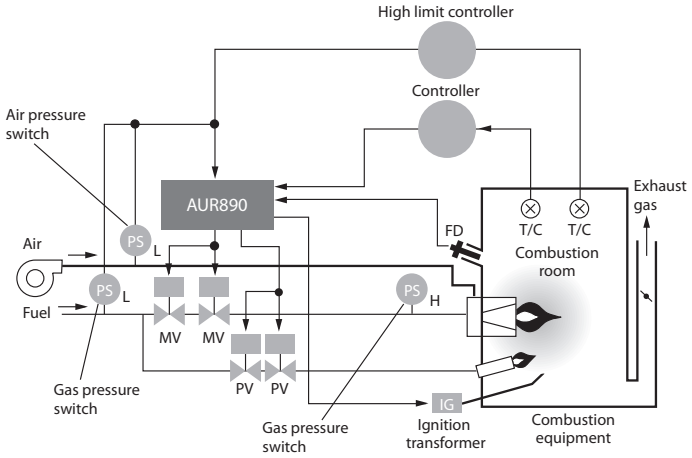

■ Ensuring safety

This device plays an important role in the safety of burner operation and flame monitoring, and is designed to ensure safety.

(1) Combustion monitoring and safety shutoff

- Immediately executes a safety shutoff of the fuel when the flame sensor detects a flame failure of the burner.
- Stops each device in a predefined sequence in the event of an ignition failure, flame failure, or cessation of combustion.

(2) Starting, running, and stopping of combustion equipment according to a predefined sequence

- Operates each device according to the predefined sequence and timing.

(3) Safety startup

- Checks the flame detector and the flame detection circuit for flame detection error each time the start signal is issued.
- Will not start the burner if a failure is detected.

(4) Design that anticipates part failure modes

- At startup, the self-inspection circuit errs on the side of safety if a failure is detected.
- Never deviates from the ignition sequence.
- The sequence timing cannot cause a dangerous failure. (The ignition time will not be lengthened.)

■ Instructions for proper use

- This device has functions that are extremely important for the safe operation of combustion equipment. Therefore, use the device correctly, according to this user's manual.
- The device must be installed, wired, maintained, inspected and adjusted by experienced specialists who have gained knowledge and skills concerning combustion equipment and combustion safety devices.

■ Precautions on facility design

The facilities that use the combustion safety device must be designed taking into careful consideration the following safety guidelines and the like.

If the system is designed to a foreign specification, refer to laws and standards in the relevant country.

- “Technical Policy on Safety Standards for Combustion Equipment in Industrial Furnaces,” by the Ministry of Health, Labour and Welfare
- "General Safety Code for Industrial Combustion Furnaces"- JIS B 8415
- “Forced Draught Burners - Part 1: Gas Burners” - JIS B 8407-1
- “Forced Draught Burners - Part 2: Oil Burners” - JIS B 8407-2
- “Index of Safety Technology of Industrial Gas Combustion Equipment,” by Japan Gas Association
- “Safty Guideline for Gas Boiler Combustion Equipment” by The Japan Gas Association

■ Most important points for ensuring safety

The design must take into consideration the following points to ensure safety.

1. Connect loads directly to the device.
2. Make sure that the start check circuit operates correctly at startup.
3. Do not make a manual operation circuit or other bypass circuit for any loads.
4. Use a redundant shutdown system for both main valve and pilot valve.

● Precautions for instrumentation

Since this device does not have a purge function, use an external circuit to implement one.

■ Model number

(Note: The dedicated sub-base and sideboard are not provided with the AUR890 controller. Order them separately.)

Model number	Power supply	Lock-out timing	Flame failure response timing	Compatible flame detector
AUR890F110	100 Vac	13.5 ± 1.5 s	1 s max. *1	Flame rod (Ionization)
AUR890F130	100 Vac	13.5 ± 1.5 s	3 ± 1 s *1	Flame rod (Ionization)
AUR890F210	200 Vac	13.5 ± 1.5 s	1 s max. *1	Flame rod (Ionization)
AUR890F230	200 Vac	13.5 ± 1.5 s	3 ± 1 s *1	Flame rod (Ionization)
AUR890G130	100 Vac	13.5 ± 1.5 s	3 ± 1 s *2	UV sensor (AUD100/110/120)
AUR890G230	200 Vac	13.5 ± 1.5 s	3 ± 1 s *2	UV sensor (AUD100/110/120)

*1 Flame voltage at 2Vdc *2 Flame voltage at 3Vdc

■ Related equipment

● Compatible flame detector (sold separately)

• Flame detector UV sensor

Model number	Name	Notes
AUD15C1000	Advanced UV sensor Tube unit	Use a dedicated socket for the AUD100C/110C/120C
AUD100C100_	Advanced UV flame detector (Lead wire model without AUD15C)	AUD15C1000, sold separately
AUD100C1000-A15	Advanced UV flame detector (Lead wire model with AUD15C)	AUD15C1000 in package
AUD110C100_	Advanced UV flame detector (Terminal block model without AUD15C)	AUD15C1000, sold separately
AUD110C1000-A15	Advanced UV flame detector (Terminal block model with AUD15C)	AUD15C1000 in package
AUD120C120_	Advanced UV flame detector (1/2-inch mounting model)	Without G1/2 adapter, AUD15C1000, sold separately
AUD120C121_		With G1/2 adapter, AUD15C1000, sold separately

_ : The box stands for one of the following codes. 0: standard product. D: with inspection record (with data).
T: tropicalization (AUD110C only). B: with inspection record (with data) and tropicalization (AUD110C only).

• Flame rod

Model number	Name	Notes
C7007A	Flame rod holder	
C7008A	Flame rod assembly	

● Optional parts (sold separately)

Model number	Product name	Notes
BC-R05A100	Dedicated sub-base	Required for AUR890
81447514-001	Connector for front wiring *	Contains one Weidmueller model number : BL3.5/11F Compatible wire: 0.2–1.5 mm^2 (28–14 AWG)
81447514-002	Connector for front wiring * (for right-side wiring)	Contains one Weidmueller model number : BL3.5/11/270F Compatible wire: 0.2–1.5 mm^2 (28–14 AWG)
81447515-001	Side boards (2)	Contains two Not included in the sub-base
Q890A100	Base unit for RA890 replacement	The mounting holes and terminal numbers are the same as those of the sub-base (Q270A1024) of the RA890.
FSP136A100	Analog flame meter	
81447519-001	Jack cover	Contains one
81447531-001	Front connector cover	Mounting screw supplied

* Used for flame voltage measurement.

Chapter 2. Installation, Wiring

■ Installation, Precautions for wiring

⚠ WARNING

- This device has functions that are extremely important for the safe operation of combustion equipment. Use it correctly in accordance with the user's manual.
- Check the model number carefully and check that the sequence timing is as specified by the combustion equipment manufacturer. Installing an incorrect model can result in an explosion hazard.
- To connect the power to this device, connect the high potential side (L1) to terminal 2 *1 and the low potential side (L2(N)) to terminal 3. *1 Use a circuit to which power is constantly supplied after the non-fuse circuit breaker (or power switch) is turned on.
  *1. If the RA890 replacement base unit (Q890A100) is used, connect the high potential side (L1) to terminal 1 and the low potential side (L2 (N)) to terminal 2.
- Do not use a circuit that has a start input between the non-fuse circuit breaker (or power switch) and terminal 2 or 3 *2 of this device.
  *2. Between the non-fuse circuit breaker (or power switch) and terminal 1 or 2, if the RA890 replacement base unit (Q890A100) is used.
- Connect the load (ignition transformer, solenoid valve, etc.) directly to the output terminals of this device. If it is not directly connected, combustion safety cannot be ensured.
- Do not connect the solenoid valve to the high-potential (L1). If it is connected to L1 and a ground fault occurs, current can leak to the solenoid valve and open it, allowing fuel to flow out, regardless of the status of the burner controller.

⚠ CAUTION

- This device should be installed and connected based on this user's manual or manuals provided by the combustion equipment manufacturer.
- Follow all applicable regulations when doing the wiring work.
- The power should be connected as the last step of wiring. Otherwise, if the wrong terminal is touched by mistake, electrical shock or damage to this device may result.
- Make sure that loads connected to the terminals do not exceed the rating indicated in the specifications.
- Supply power at the voltage indicated on the model number label of the device.
- In keeping with technical standards for electrical equipment, the burner frame must be connected to an earth ground by a wire having a resistance of less than 100 Ω.
- Keep power lines and ignition transformer high-voltage cables separate from the flame detector wires.
- Run the high-voltage ignition transformer cable separately and keep it at least 30 cm away from the device.
- Make sure that ignition transformer high-voltage cables are properly connected to prevent faulty contact. Faulty contact can generate high-frequency radio waves, causing malfunction.
- The ignition transformer ground lead should be connected directly to the burner itself or to a metallic part electrically connected to the burner.
- After wiring work, be sure to check that the wiring is correct. Incorrect wiring can cause damage or malfunction.

⚠ CAUTION

- If the wires from this device exceed the recommended length, to prevent malfunction due to external electrical noise, take measures such as keeping power lines away from the input lines between the control panel and the combustion equipment. After wiring, check that the equipment is operating properly.
- In the case of model AUR890G, do not connect terminal G to the ground.
- Use non-voltage contacts for the connection to this device's external controller (for low voltage).
- After the power has been turned ON, leave sufficient time before checking the output. This device does not operate for about 8 seconds after the power has been turned ON.
- Do not design instrumentation that shuts off the power to this device as soon as alarm output is generated. Doing so can corrupt this device’s operation history records.
- If there is an inverter or the like that generates strong electrical noise near this device, take noise-suppression measures, referring to the user's manual for the noise-generating equipment.
- Ensure you turn off the power of this device and all auxiliary devices when mounting, removing or connecting the wires of this device.
  There is a risk of electrical shock.
- Do not wire this device so that it starts when the power is switched on. Doing so may prevent execution of the start check.
- Connect the power to terminals 2 and 3. For start-stop control, connect the external controller (for low voltage) across terminals 17 and 20, or use voltage input from the external controller (for power) to terminal 1.

■ Installation method

⚠ WARNING

- Ensure you turn off the power of this device and all auxiliary devices when mounting, removing or connecting the wires of this device.
  There is a risk of electrical shock.

⚠ CAUTION

- Mounting, wiring, maintenance, inspection, calibration, etc. should be carried out by a professional with technical training in combustion systems and flame safeguard control devices.
- Do not install where exposed to any of the following:
  - Certain chemicals or corrosive gases (ammonia, sulfur, chlorine, ethylene compounds, acids, etc.)
  - Dripping water or excessive humidity
  - High temperatures
  - Sustained long-term vibration
- For mounting and wiring, follow the instructions in this user's manual or in the combustion equipment manufacturer's manual.
- A fuse is built into the control load line of this device. Do not short-circuit the load, or the fuse will melt. If the fuse has melted, replace the device.
- When using the device as a burner control system, install it to a control panel that supports IP40 or more. If IP40 is required for this single device, also use a side board (sold separately). The protection structure of the device is equivalent to IP10.

■ Cautions regarding installation

- Take space 50 mm above and below, 50 mm to the left and right, and 80 mm to the front, **as space for removal, wiring, and maintenance**. Also, do not install this device close to electric power devices or other sources of heat.

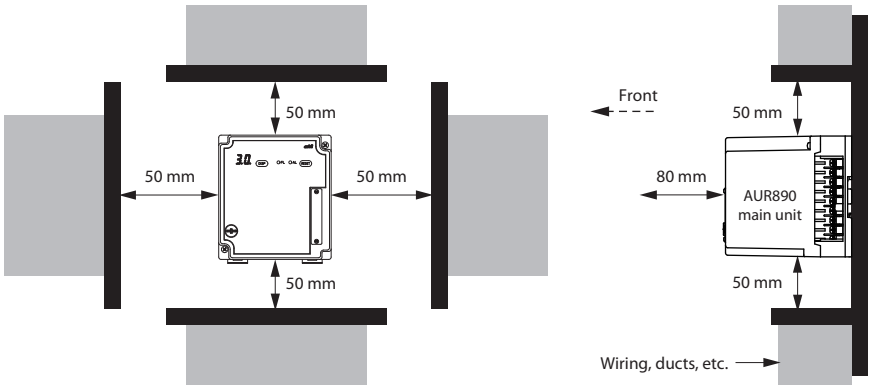

- This device must be grounded within a grounded and conductive control panel to ensure safety.
- Do not pull the wiring while it is attached to the device. Doing so can cause failures of the connectors or the device itself.

■ When the sub-base (BC-R05A100) is used

● Installation orientation

Attach the device in the orientation shown below.

Do not install it in the orientations illustrated below.

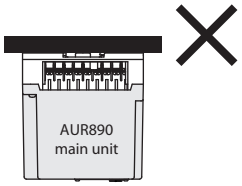

● DIN rail mounting

(1) Pull down the sub-base's DIN rail clamp.

(2) Attach to the DIN rail while checking above and below the sub-base.

(3) Push up the DIN rail clamp to attach the sub-base to the DIN rail.

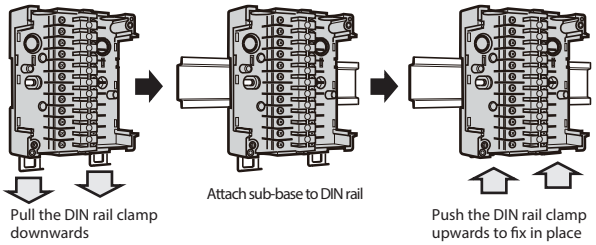

● Mounting in a panel

(1) Drill two M4 screw holes into the panel.

(Unit: mm)

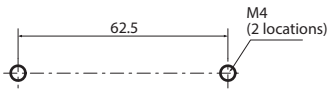

(2) Use screws to mount the sub-base on the panel.
(Maximum tightening torque: 1.2 N•m)

⚠ CAUTION

Turn the power off before mounting the device on the sub-base. Otherwise, device failure may occur.

● **Mounting/removing the device and sub-base (sold separately)**

(Mounting)

(1) Align the indentation in the center of the top of the device with the projection on the sub-base.

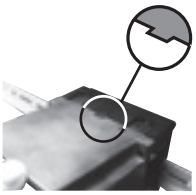

(2) Once aligned as in (1), push straight downwards slowly.

(3) Tighten the device's retaining screws to secure it in the sub-base. (Maximum tightening torque: 0.5 N•m)

(Removal)

(1) Remove the retaining screws from the device.

(2) Pull it out horizontally while holding down the sub-base.

■ When the base unit (Q890A100) for RA890 replacement is used

● Installation orientation

Attach the device in the orientation shown below.

Do not install it in the orientations illustrated below.

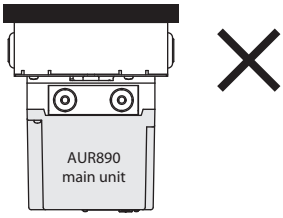

● Mounting in a panel

(1) Cut three 5 mm diameter holes in the panel.

(Unit: mm)

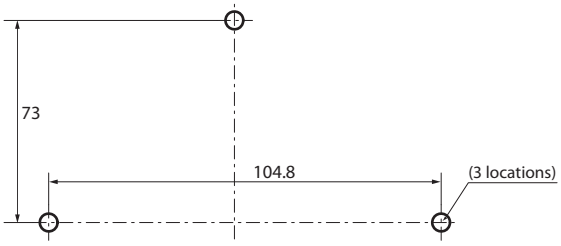

(2) Loosen the four retaining screws to remove the upper part of the replacement base unit.

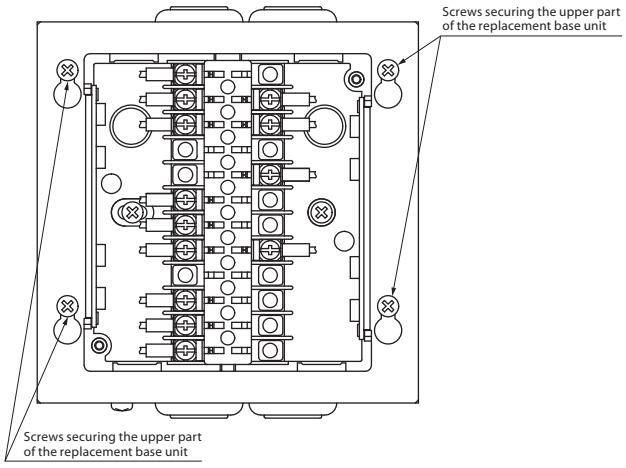

(3) Insert screws into the three mounting holes in the lower part of the base unit, and tighten the screws.

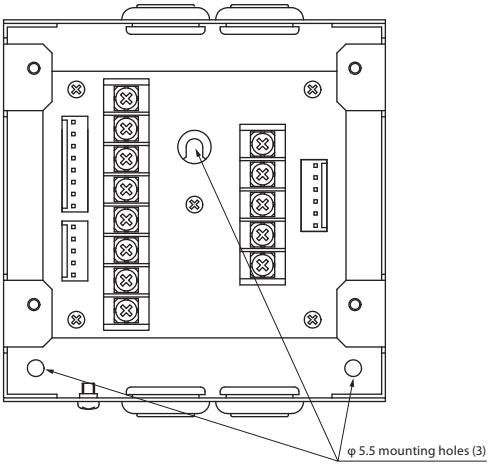

(4) Wire the external connections to the terminal block on the lower part of the replacement base unit, and then connect the cable connectors of the upper part of the base unit to the connectors on the lower part.

(5) After connecting the connectors, attach the upper part to the lower part using the four retaining screws (maximum tightening torque: 1.2 N•m).

Structure of the replacement base unit (Q890A100)

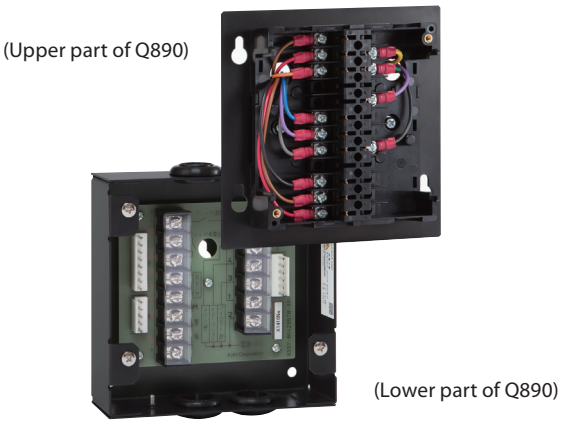

■ Terminal numbers, front panel item names

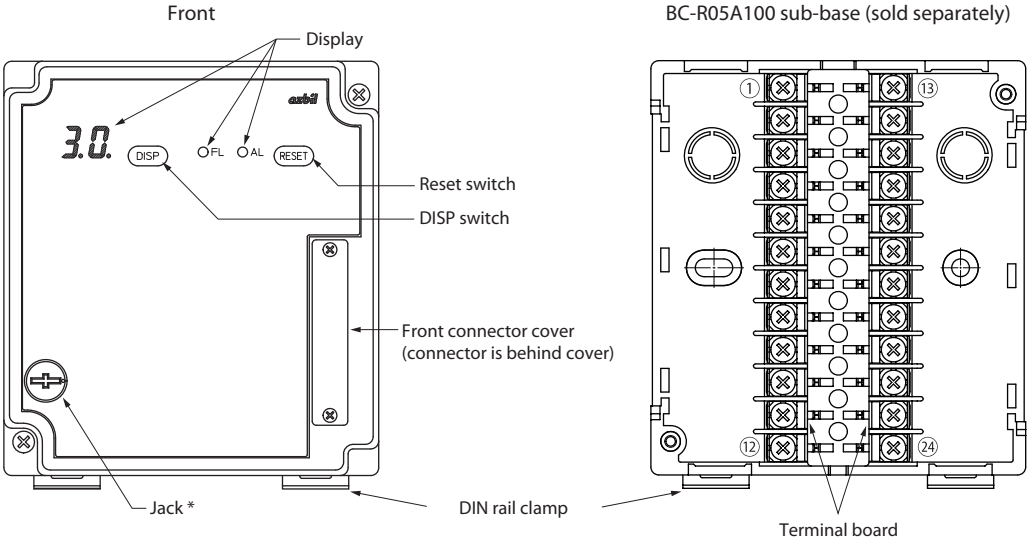

* Not used
(for inspection and adjustment before shipment)

● Terminal No.

Front connector terminals

No.	Function	No.	Function
25	Flame voltage output (+)	31	NC
26	Flame voltage output (-)	32	NC
27	NC	33	NC
28	NC	34	NC
29	NC	35	NC
30	NC	-	-

BC-R05A100 sub-base terminals

No.	Function	No.	Function
1	External controller (for power supply)	13	NC
2	AC power supply (L1)	14	Flame detector (F)
3	AC power supply (L2 (N))	15	Flame detector (G)
4	NC	16	NC
5	NC	17	External controller for low voltage (use non-voltage contacts betw. Nos. 17 & 20)
6	Ignition transformer output	18	NC
7	Pilot valve output	19	NC
8	Main valve output	20	External controller for low voltage (use non-voltage contacts betw. Nos. 17 & 20)
9	NC	21	NC
10	Alarm output COM	22	NC
11	Alarm output NO	23	NC
12	Alarm output NC	24	NC

● **Connector for front wiring (81447514-001) terminal layout**

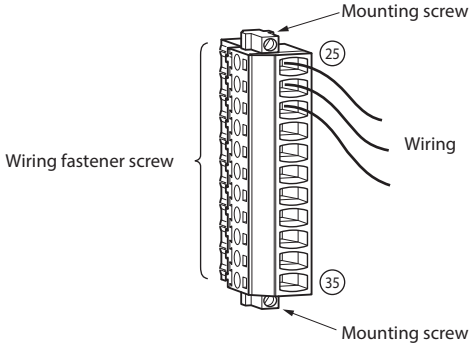

● **Connector for front wiring (for right side wiring) (81447514-002) terminal layout**

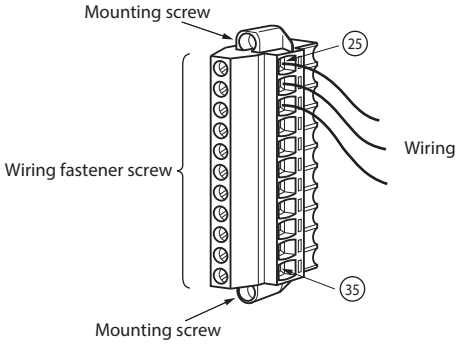

● External connection terminals of the RA890 replacement base unit (Q890A100)

External connection terminals of Q890A100

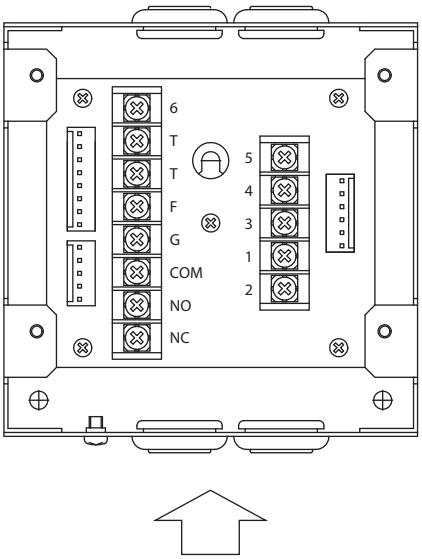

Q890A100 external-connection terminal Nos.

No.	Function
1	AC power supply (L1)
2	AC power supply (L2 (N))
3	Pilot valve output
4	Ignition transformer output
5	Main valve output
6	Controller (Power supply)
T	External controller (for low voltage) (Non-voltage contacts)
T	
F	Flame detector
G	

COM	Alarm output
NO	
NC	

When the upper part of the replacement base unit is removed,
the external connection terminals can be viewed.

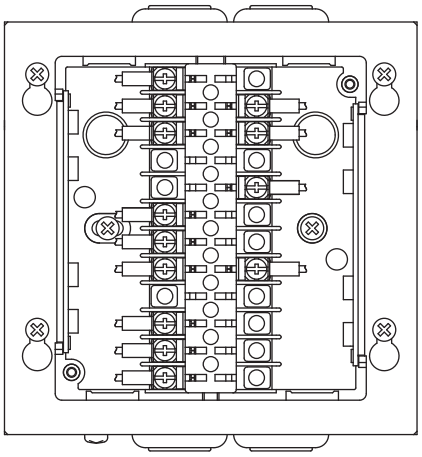

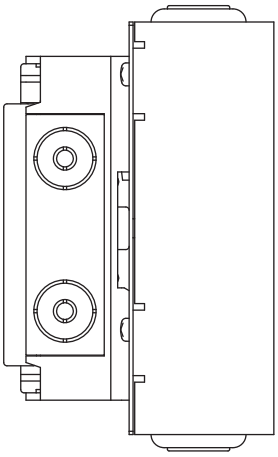

Q890A100

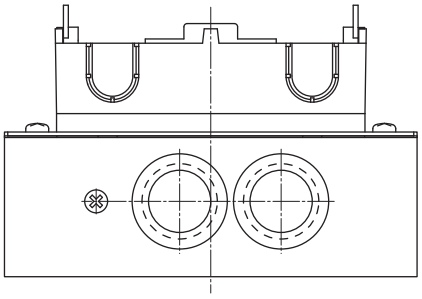

■ Example of wiring connection with external device

⚠ WARNING

Implement a safety design for the pre-purge and external timer circuits, taking into account the safety guidelines for the equipment. An explosion can occur if this device is turned on without carrying out a pre-purge. This device does not have a pre-purge function.

● When the BC-R05A100 sub-base is used (terminals 1–24 are on sub-base, 25–35 on front connector)

- **Non-recycling gas-fired combustion**

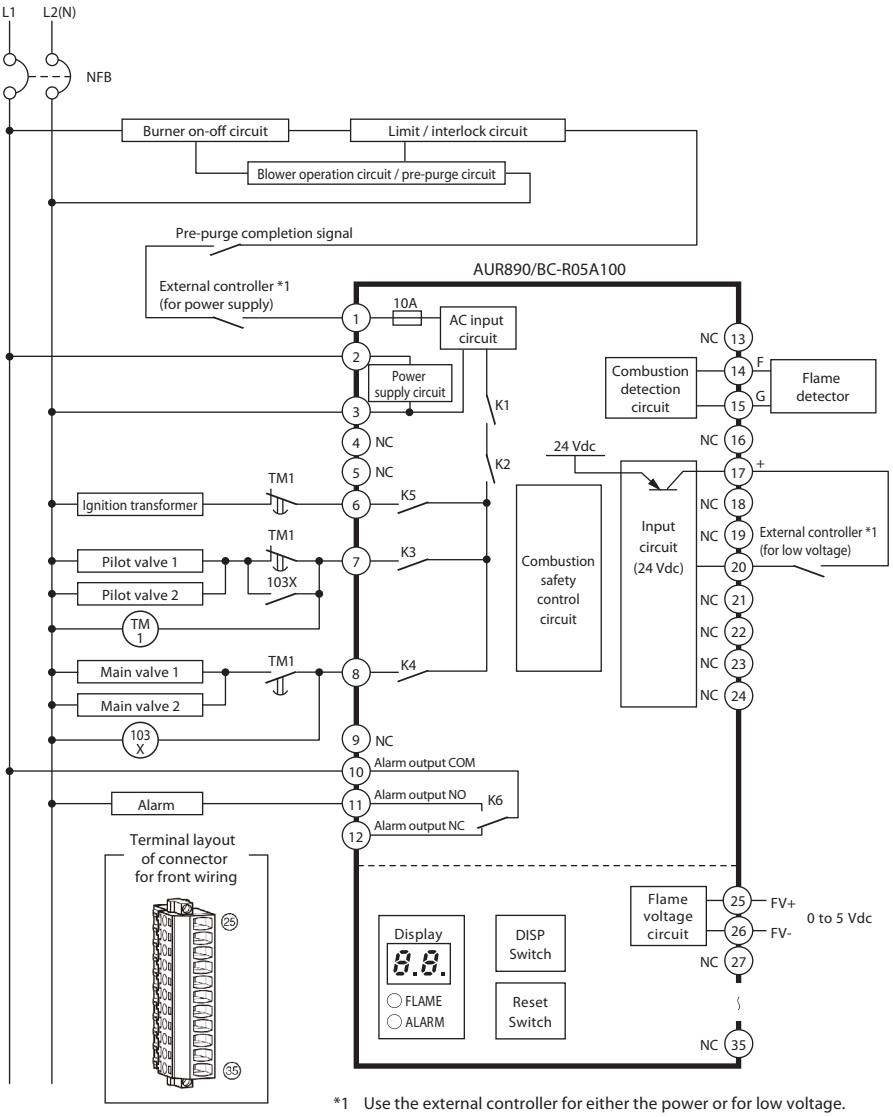

*1 Use the external controller for either the power or for low voltage.

• Non-recycling oil-fired combustion (2-level combustion)

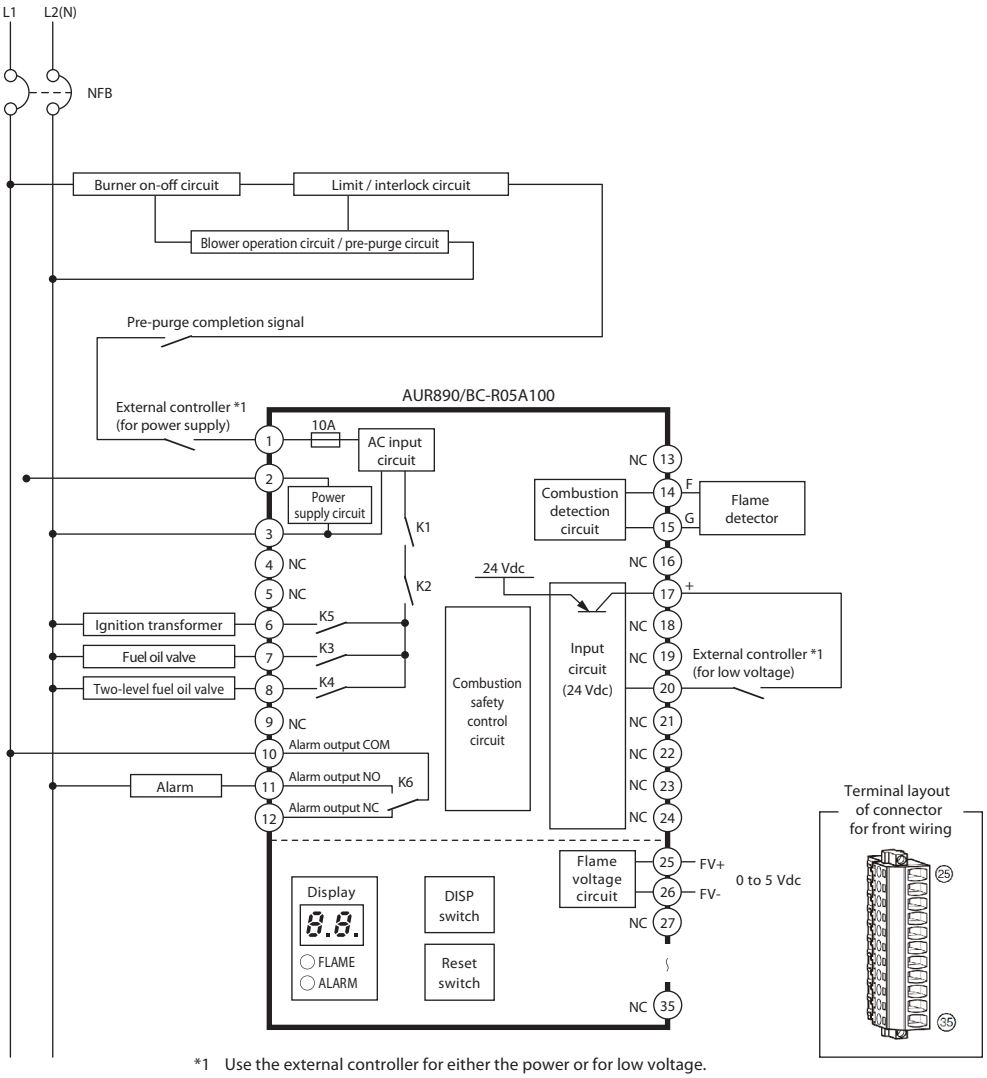

*1 Use the external controller for either the power or for low voltage.

● Q890A100 base unit for RA890-AUR890 replacement

• Non-recycling gas-fired combustion

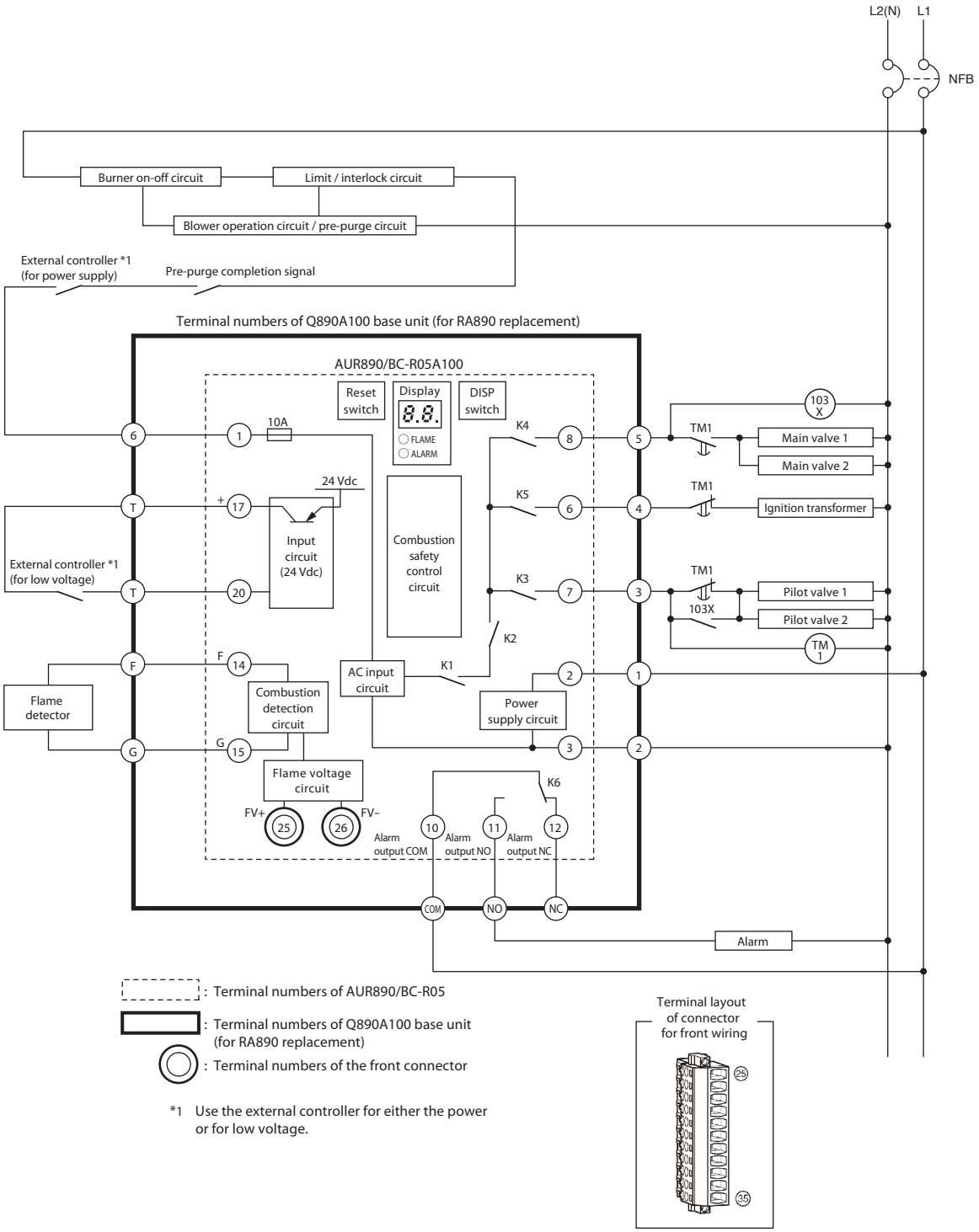

*1 Use the external controller for either the power or for low voltage.

• Non-recycling oil-fired combustion (2-level combustion)

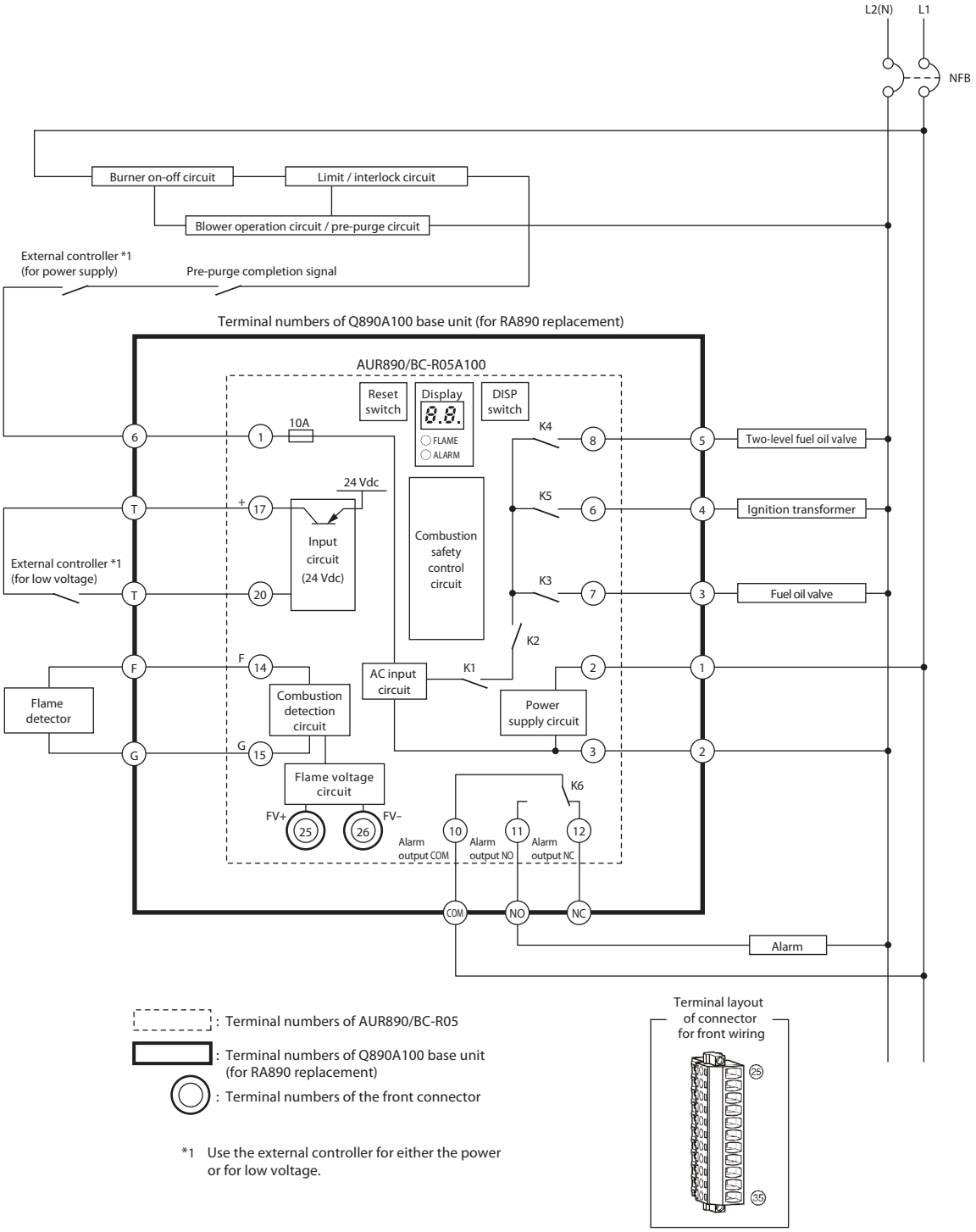

*1 Use the external controller for either the power or for low voltage.

● Wiring to a flame detector (UV sensor)

• **AUD100C+AUD15C**

• **AUD110C+AUD15C**

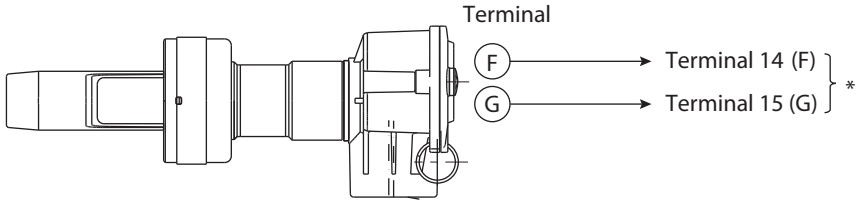

• **AUD120C+AUD15C**

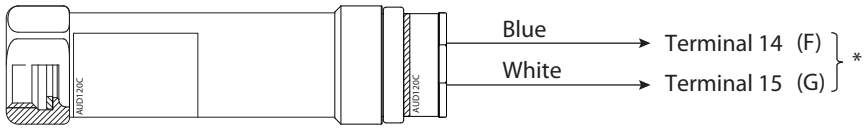

* If connection of the blue and white lead wires is reversed, or if the connections to terminals (F) and (G) are reversed, the AUD15C tube unit may be damaged.

● Wiring to a rectification flame rod

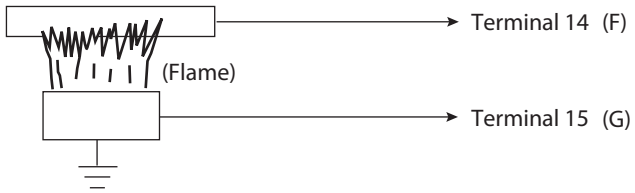

● Example countermeasures against power surges caused by lightning

When using a line surge suppressor as a countermeasure against power surges caused by lightning, connect it between Terminal 3 and the ground, as shown below.

The mounting brackets of the surge suppressor are crimp-on at the grounded side and inside and in conducting state.

Therefore, they can be grounded by simply attaching them to a grounded metal part such as the device cabinet.
When wiring to the power supply, use a lead wire of 0.75mm^2 (diameter: 0.18, strand count: 30) or more, which complies with JIS C 3306. Attach #187 Faston receptacle at one end and make the wire length as short as possible when connecting it.

• Connections when BC-R05A100 sub-base is used

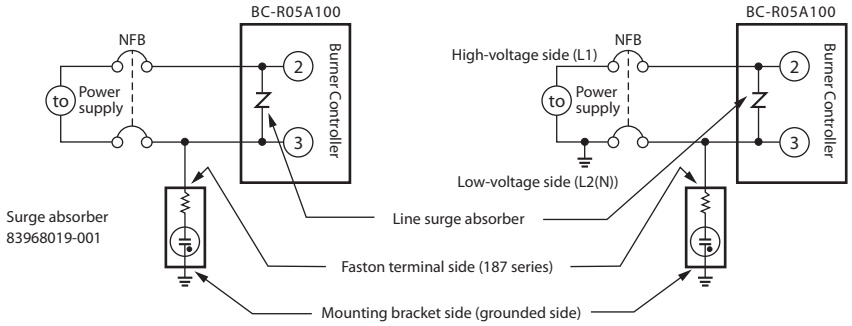

• Connections when Q890A100 replacement base unit is used

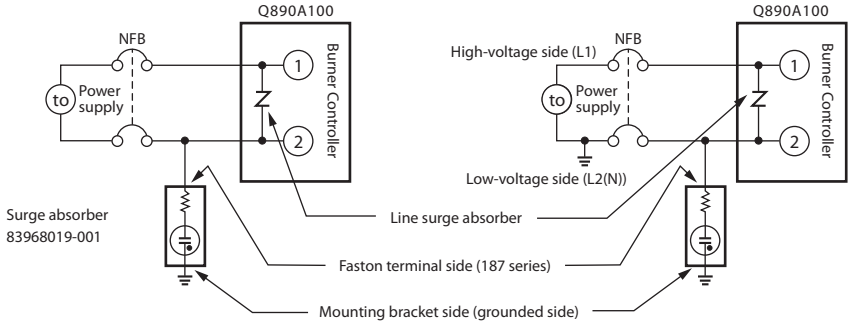

● Connections to solenoid valve

⚠ WARNING

Do not connect the solenoid valve to the high potential side (L1). If it is connected to L1 and a ground fault occurs, current can leak to the solenoid valve and open it, allowing fuel to flow out, regardless of the status of the burner controller.

• Correct method of connection

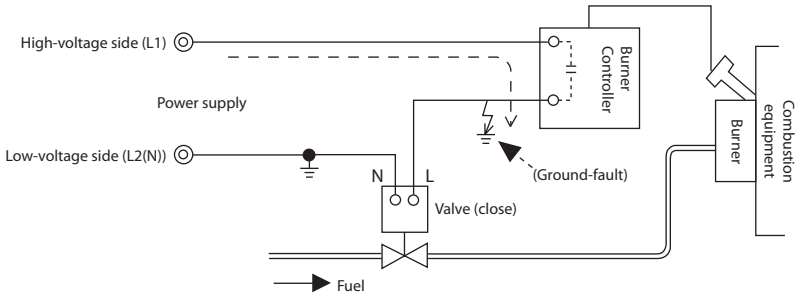

If the solenoid valve is properly connected as shown above, current will not leak to the solenoid valve and an uncontrolled fuel flow will not occur if there is a ground fault due to insulation failure on the high potential side (H).

• Wrong method of connection

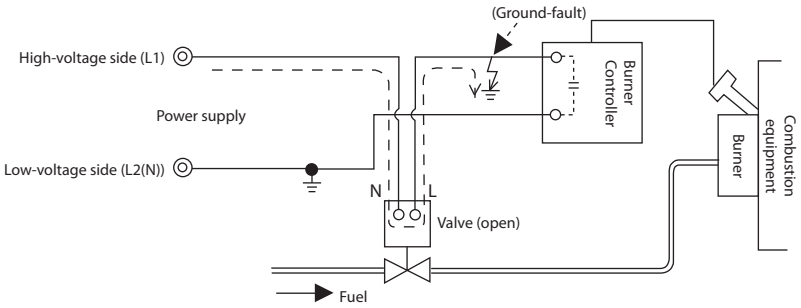

If the solenoid valve is connected to the high potential side (H) as shown in the figure above, and a ground fault occurs, current can leak to the solenoid valve and open it, causing an uncontrolled flow of fuel regardless of the status of the burner controller.

Chapter 3. Operation

■ Part names

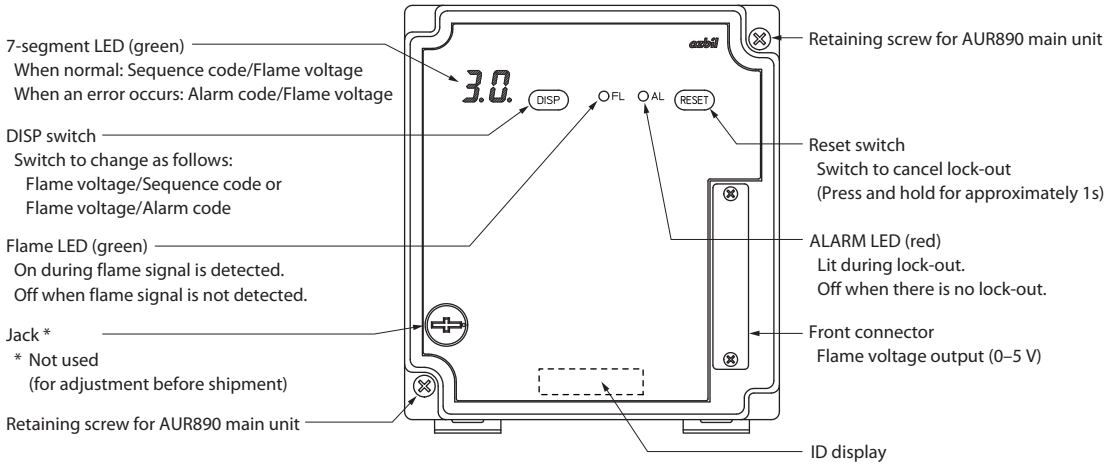

When a lock-out occurs, a alarm code is displayed automatically.
When an alarm occurs, the sequence code and alarm code issued when the lock-out occurred are displayed alternately.

ID display

Item		Notation
• Product number		AUR890xxxx
• Voltage		xxx Vac
• Flame detector (UV sensor)		UV
(Flame rod)		Ionization
• Timing display	Ignition trial	IGT xx s
	Flame failure response time	FFRT xx s

■ Operation

● Reset switch *

Lock-out is canceled when the reset switch is pressed and held for 1 s.

* After the lock-out is canceled, a stabilization time of approximately 5 seconds should be maintained.
During the stabilization time, no start input can be accepted.

● DISP switch

During normal operation

The 7-segment display shows a sequence code.
Every time the DISP switch is pressed, the display is changed between the sequence code and flame voltage alternately.

Sequence codes

Code	Description
P1	Start check
P3	Ignition standby
P4	Lock-out timing
P5	Steady combustion standby
P8	Steady combustion
––	Stop

When an error occurs

The 7-segment display shows a alarm code and the sequence code for which the alarm was issued alternately.

Every time the DISP switch is pressed, the display is changed between a alarm code and the sequence code for which the alarm was issued alternately as well as the flame voltage.

Alarm codes

Alarm codes	Sub-code	Description
E1	None	Interlock error
E6		Ignition failure
E7		Flame failure
E9	02	Switch input
E9	03	Internal relay feedback (K1)
E9	05	Abnormal voltage on terminal 7 (PV)
E9	06	Abnormal voltage on terminal 8 (MV)
E9	07	Abnormal voltage on terminal 6 (IG)
E9	08	Alarm at power ON
E9	50 or more	Device error

Examples of sequence codes and alarm codes (Alarm code: When there is not a sub-code)

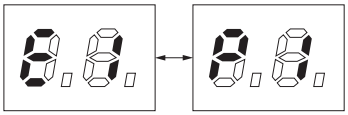

Switches every 0.8 s

Examples of sequence codes and alarm codes (Alarm code: When there is a sub-code)

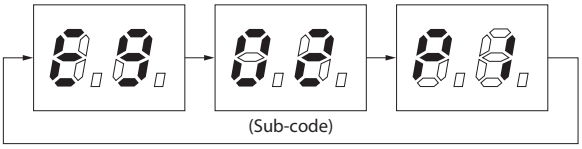

Switches every 0.8 s

Chapter 4. Explanation of Operation

⚠ CAUTION

- After the power has been turned ON, leave sufficient time before checking the output.
  This device does not operate for about 8 seconds after the power has been turned ON.
- The AC and DC input circuits use approximately 1 second for checking after the input signal turns ON.

■ Example of wiring connection with external device: Internal block diagram

● When the BC-R05A100 sub-base is used (terminals 1–24 are on sub-base, 25–35 on front connector)

• Non-recycling gas-fired combustion

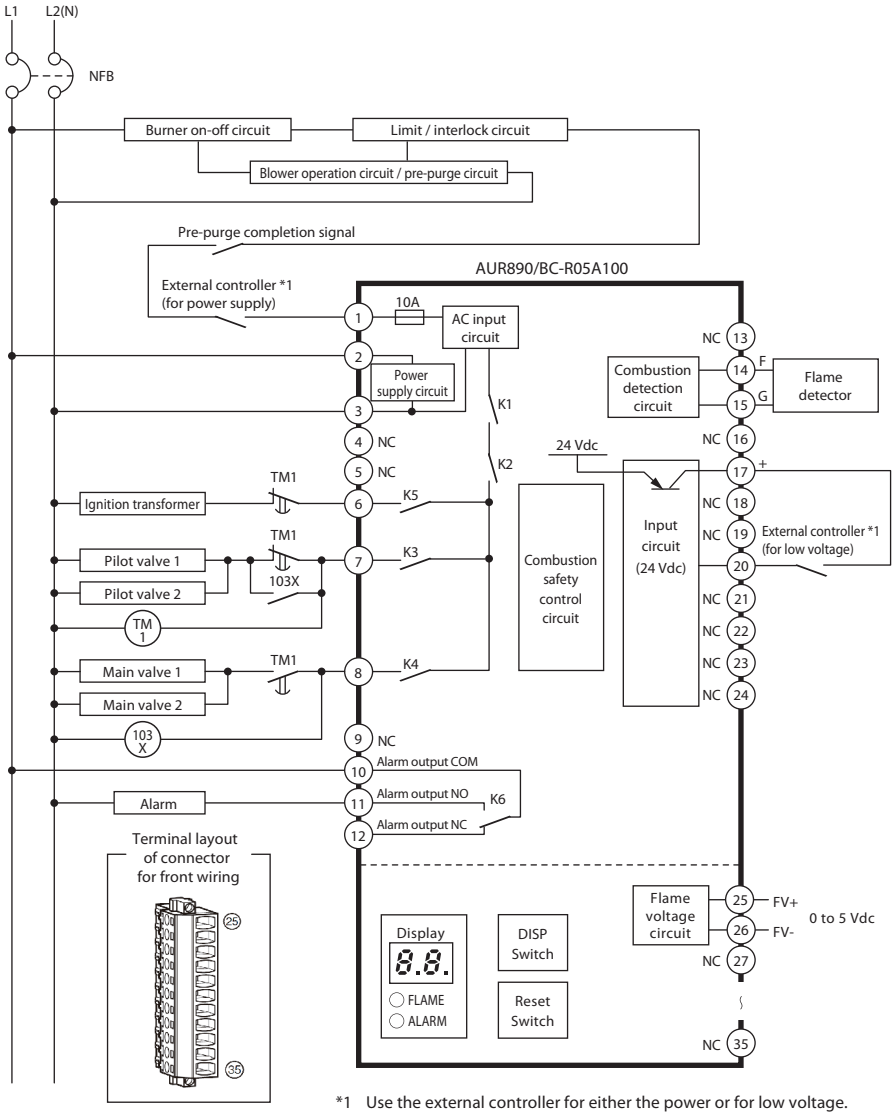

*1 Use the external controller for either the power or for low voltage.

• Non-recycling oil-fired combustion (2-level combustion)

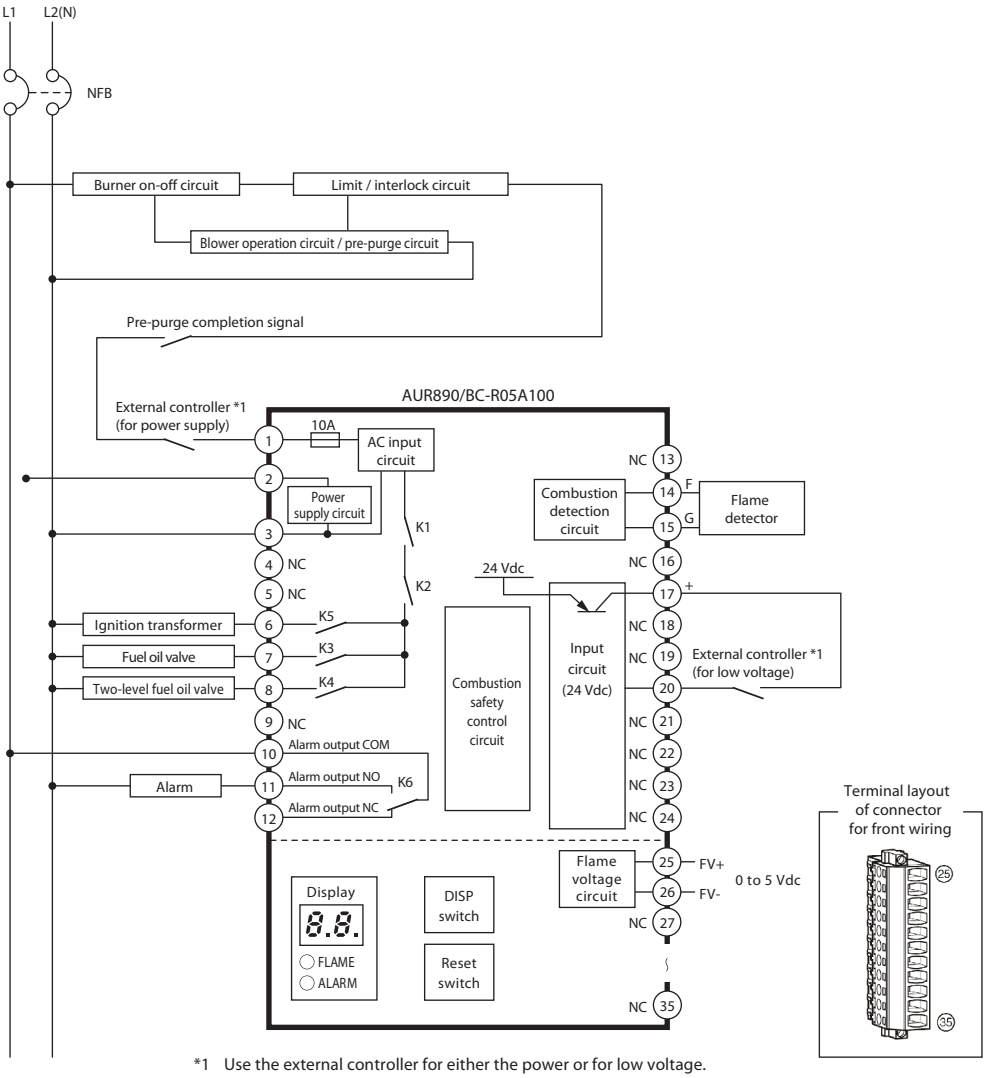

*1 Use the external controller for either the power or for low voltage.

● Q890A100 base unit for RA890-AUR890 replacement

• Non-recycling gas-fired combustion

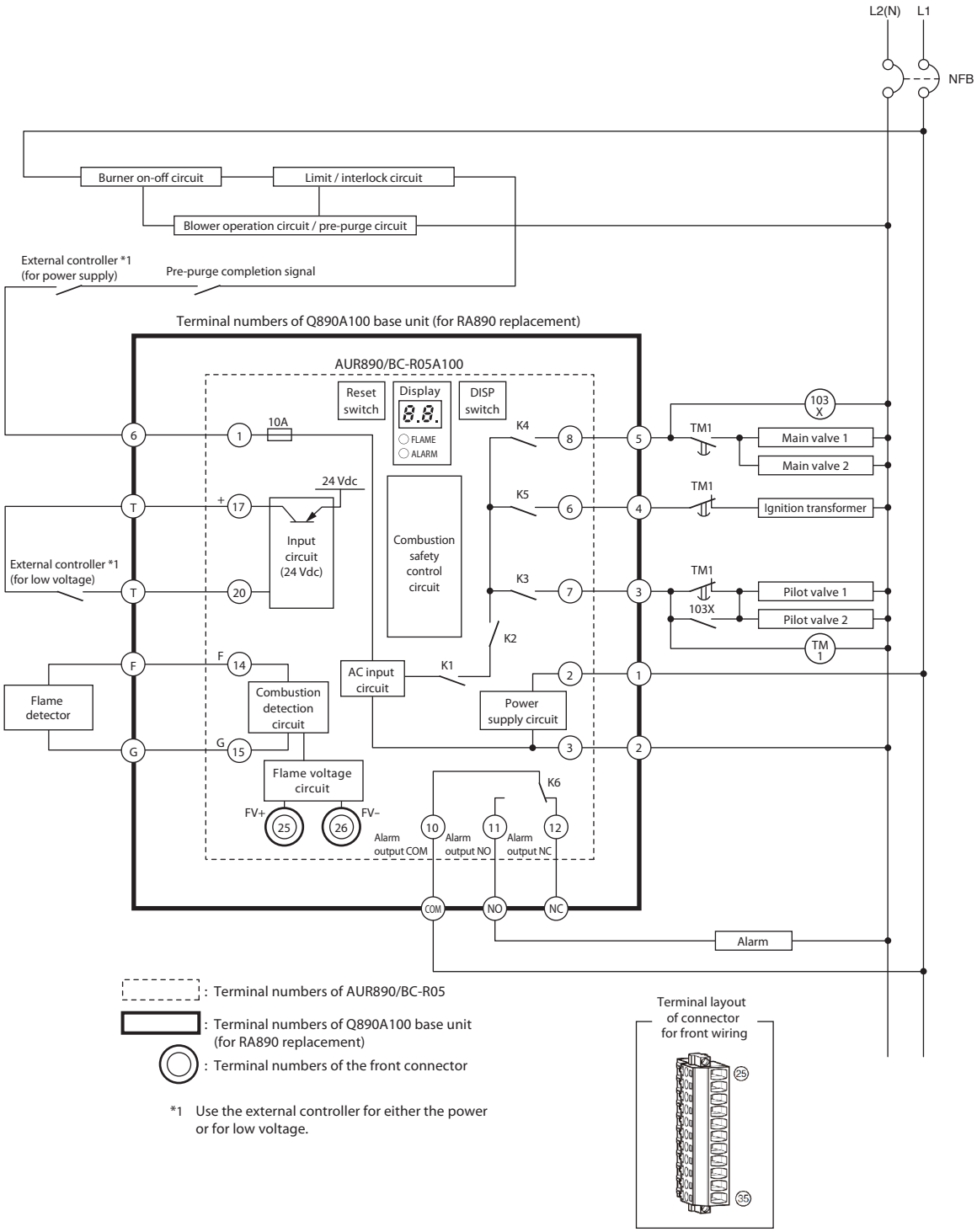

• Non-recycling oil-fired combustion (2-level combustion)

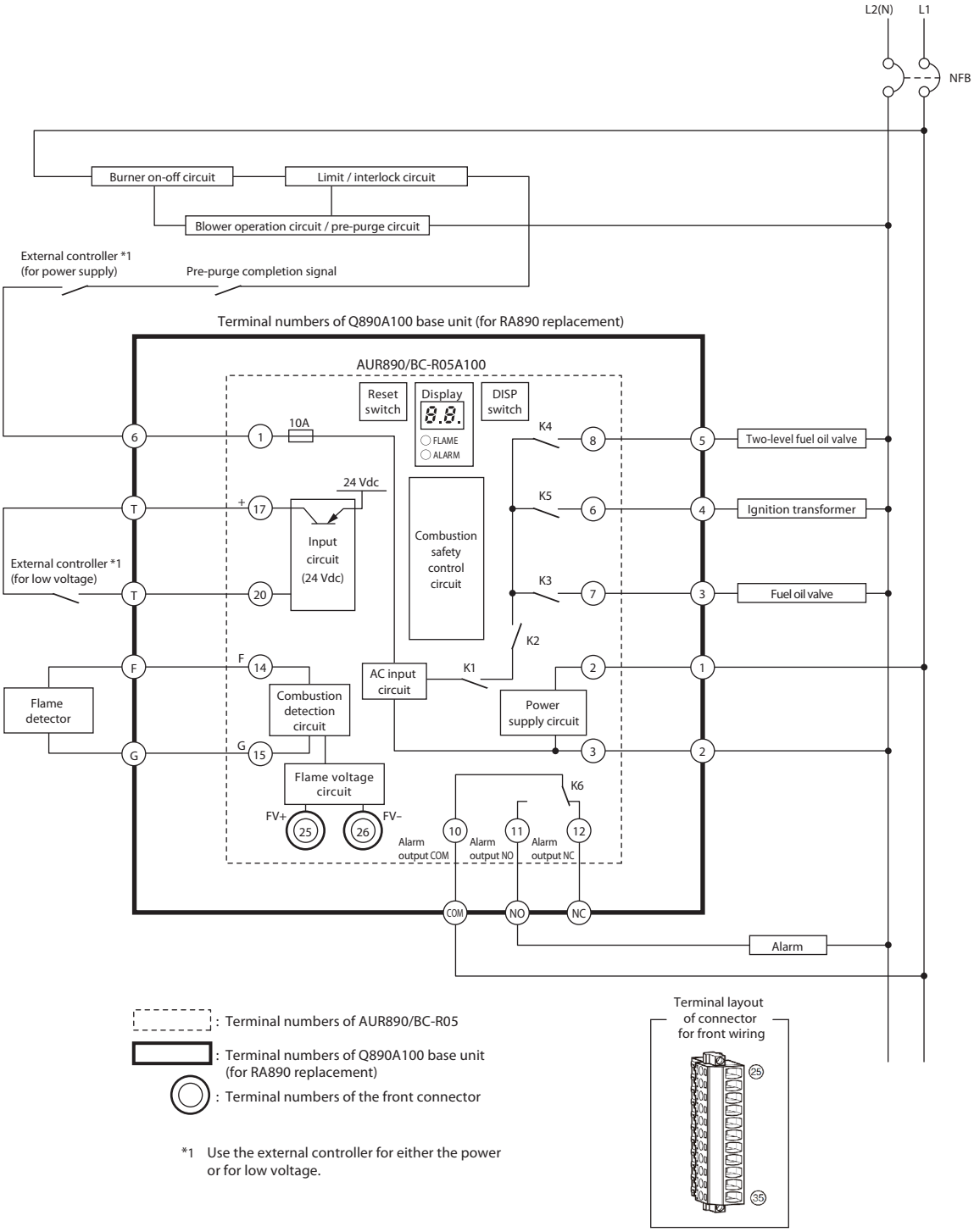

■ Example sequence

● Normal operation (Non-recycling gas-fired combustion)

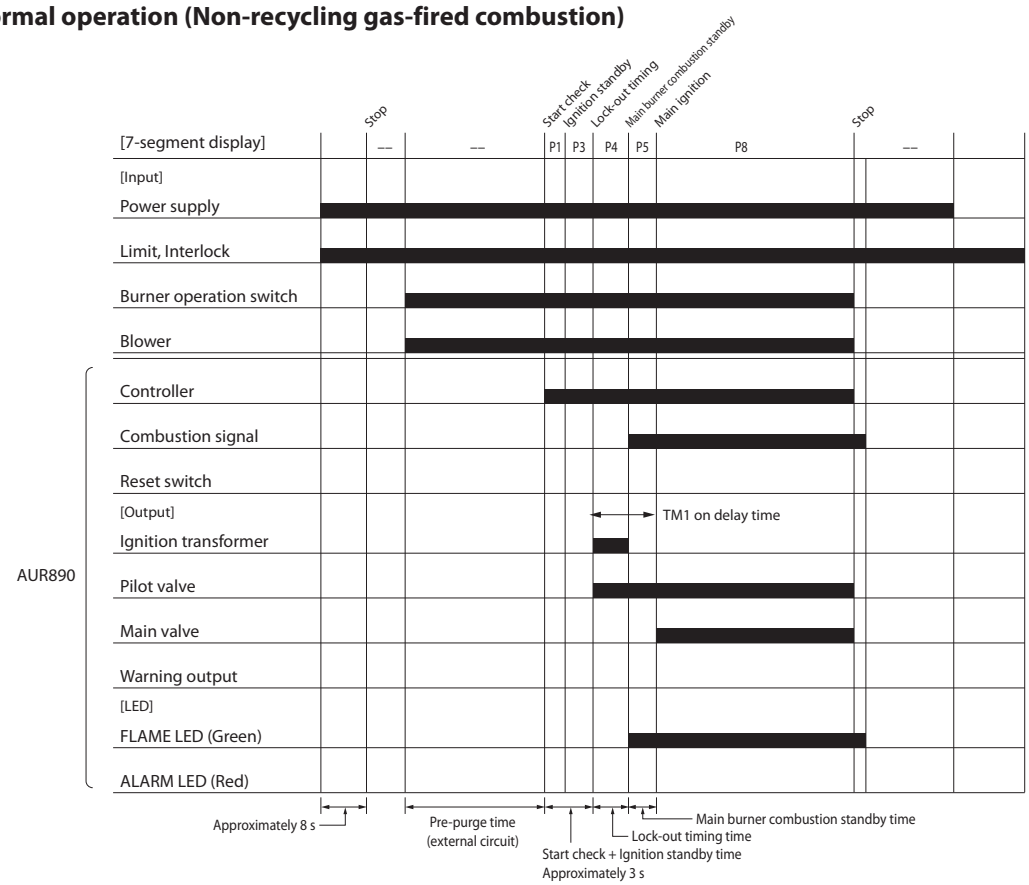

Input	AUR890 operation	Sequence codes	Operation of external devices
Power ON	When approximately 8 seconds have passed after the power has been turned on, the 7-segment LED display on the front panel of the AUR890 shows the sequence code [- -].	- -	
Burner operation switch ON		- -	When the burner operation switch is turned on, the blower starts to operate, and if the limit and interlock conditions are normal, a pre-purge is done. After the pre-purge, the pre-purge completion signal is turned ON. Blower: operating
External controller ON	If the pre-purge completion signal is ON and the external controller is ON, the internal circuits are checked during the start check.	P1	
	Afterward a false flame check is conducted during the ignition wait time.	P3	
	If the status is normal, the lockout time begins, relays K1, K2, K3 and K5 turn ON, the ignition transformer starts, the pilot valve begins to open, and external timer TM1 turns ON.	P4	Ignition transformer : start Pilot valve : open (TM1 starts)
	When the flame sensor detects the pilot burner flame, relay K5 turns OFF to stop the ignition transformer.	P5	Ignition transformer : continues operation Pilot valve : remains open
	Relay K4 and external relay 103X turn ON. When the time set for timer TM1 has passed and TM1's contacts have turned ON, the main valve opens to begin normal combustion. The FLAME LED (green) on the front panel of the AUR890 lights up.	P8	Ignition transformer : stop Main valve : open (103X : ON) (TM1's contacts : ON)
Burner operation switch OFF	When the burner operation switch is turned OFF, relays K1, K2, K3 and K4 turn off, and the pilot and main valves begin to close. The FLAME LED (green) on the front panel of the AUR890 turns off.	- -	Fuel oil combustion valve : closed Main valve : closed Blower : stop
Power OFF	When the power is turned OFF, the 7-segment LED display on the front panel of the AUR890 stops showing the sequence code [- -].		

* The AUR890 turns the main valve ON after the standby process for normal combustion. This feature does not allow the main valve to be turned on immediately after ignition in order to prevent the flame from being blown out. During the standby process for normal combustion, if the time set for external timer TM1 has passed and the contacts are reversed, the supply of power to the pilot valve and main valve may be interrupted for a moment.
Whenever a flame is detected just before completion of the time set for external timer TM1, ignition is delayed. Adjust the burner so that it ignites reliably at least one second before the time set for external timer TM1 passes.

⚠ WARNING

Do not connect the solenoid valve to the high potential side (L1). If it is connected to L1 and a ground fault occurs, current can leak to the solenoid valve and open it, allowing fuel to flow out, regardless of the status of the burner controller.

● Operation when an ignition failure occurs (Non-recycling gas-fired combustion)

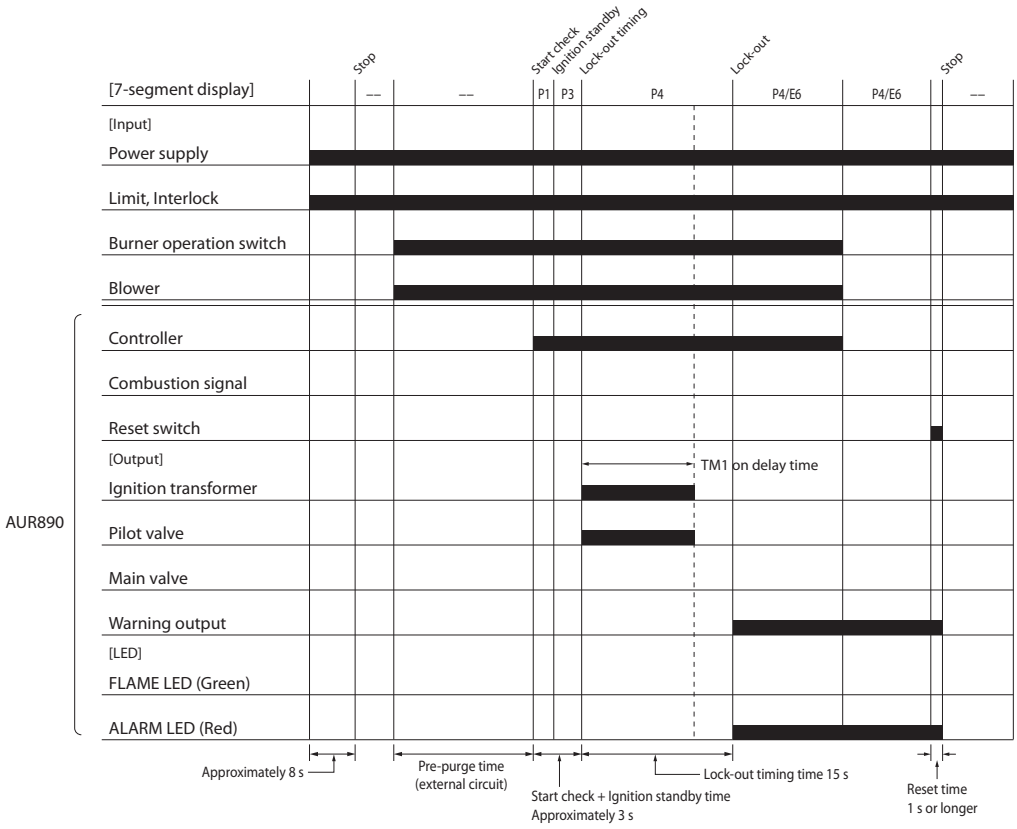

Input	AUR890 operation	Sequence codes	Operation of external devices
Power ON	When approximately 8 seconds have passed after the power has been turned on, the 7-segment LED display on the front panel of the AUR890 shows the sequence code [- -].	- -	
Burner operation switch ON		- -	When the burner operation switch is turned on, the blower starts to operate, and if the limit and interlock conditions are normal, a pre-purge is done. After the pre-purge, the pre-purge completion signal is turned ON. Blower: operating
External controller ON	If the pre-purge completion signal is ON and the external controller is ON, the internal circuits are checked during the start check.	P1	
	Afterward a false flame check is conducted during the ignition wait time.	P3	
	If the status is normal, the lockout time begins, relays K1, K2, K3 and K5 turn ON, the ignition transformer starts, the pilot valve begins to open, and external timer TM1 turns ON.	P4	Ignition transformer : start Pilot valve : open (TM1 starts)
	When the time set for TM1 has passed after the start of ignition transformer operation, TM1's contacts turn off, the ignition transformer ceases operation, and the pilot valve opens.	P4	Ignition transformer : stop Pilot valve : closed Alarm output : OFF (TM1's contacts : OFF)
	If the flame sensor does not detect a flame within the lockout time, relays K1, K2, K3 and K5 turn OFF, relay K6 turns ON, and the alarm output turns ON. The ALARM LED (red) on the front panel of the AUR890 lights up.	P4 / E6	Ignition transformer : stop Pilot valve : closed Alarm output : ON (TM1 stop)
Burner operation switch OFF		P4 / E6	Blower : stop
Reset Switch ON	Relay K6 turns OFF to turn OFF the alarm output. The ALARM LED (red) on the front panel of the AUR890 turns off.	- -	Alarm output : OFF

● Operation when a flame failure occurs (Non-recycling gas-fired combustion)

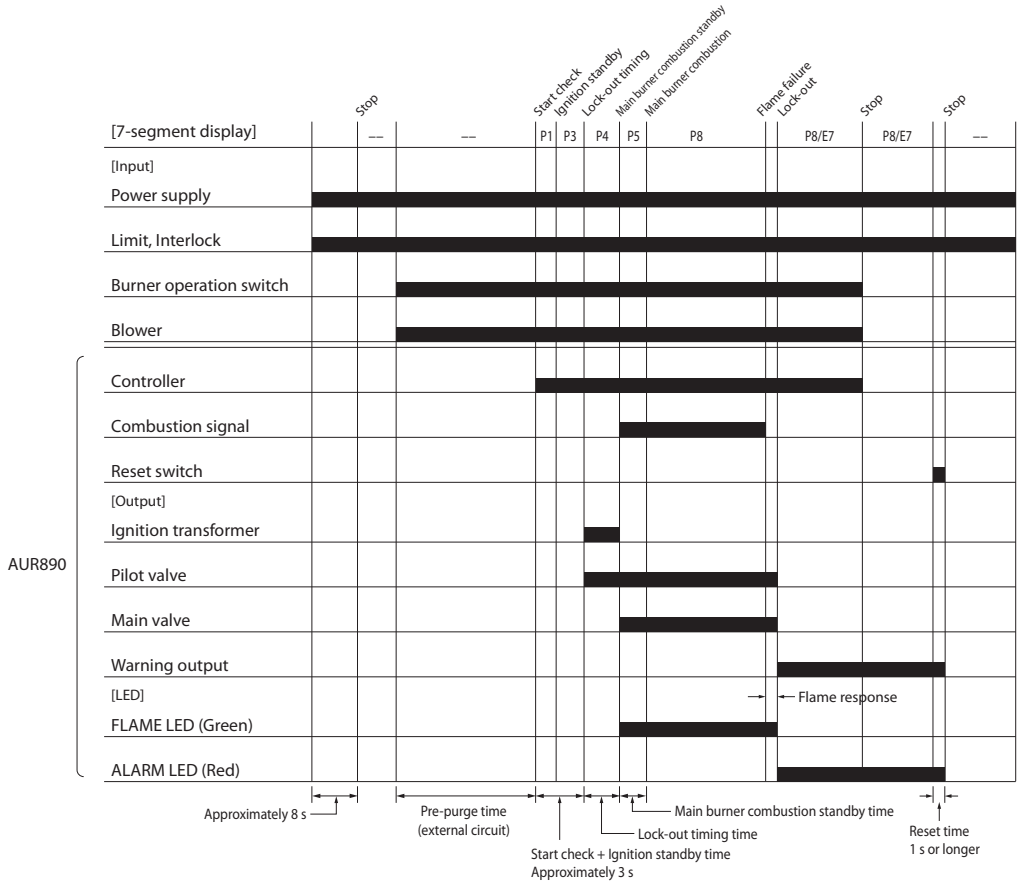

Input	AUR890 operation	Sequence codes	Operation of external devices
Power ON	When approximately 8 seconds have passed after the power has been turned on, the 7-segment LED display on the front panel of the AUR890 shows the sequence code [- -].	- -	
Burner operation switch ON		- -	When the burner operation switch is turned on, the blower starts to operate, and if the limit and interlock conditions are normal, a pre-purge is done. After the pre-purge, the pre-purge completion signal is turned ON. Blower: operating
External controller ON	If the pre-purge completion signal is ON and the external controller turns ON, the sequence that follows is start check, ignition standby, lockout time, standby for normal combustion, and normal combustion. The FLAME LED (green) on the front panel of the AUR890 lights up.	P8	Pilot valve : open Main valve : open
	During main burner combustion, if a flame failure of the burner occurs for some reason, after the flame failure response time has passed, the AUR890 will be locked out so that relays K1, K2, K3, and K4 turn OFF, the pilot and main valves close, relay K6 turns ON, and the alarm output turns ON. FLAME LED (green) on the front panel of the AUR890 turns off, and ALARM LED (red) turns on.	P8 / E7	Pilot valve : closed Main valve : closed Alarm output : ON
Burner operation switch OFF		P8 / E7	Blower : stop
Reset Switch ON	Relay K6 turns OFF to turn OFF the alarm output. The ALARM LED (red) on the front panel of the AUR890 turns off.	- -	Alarm output : OFF

● Operation when there is a false flame before start input (Non-recycling gas-fired combustion)

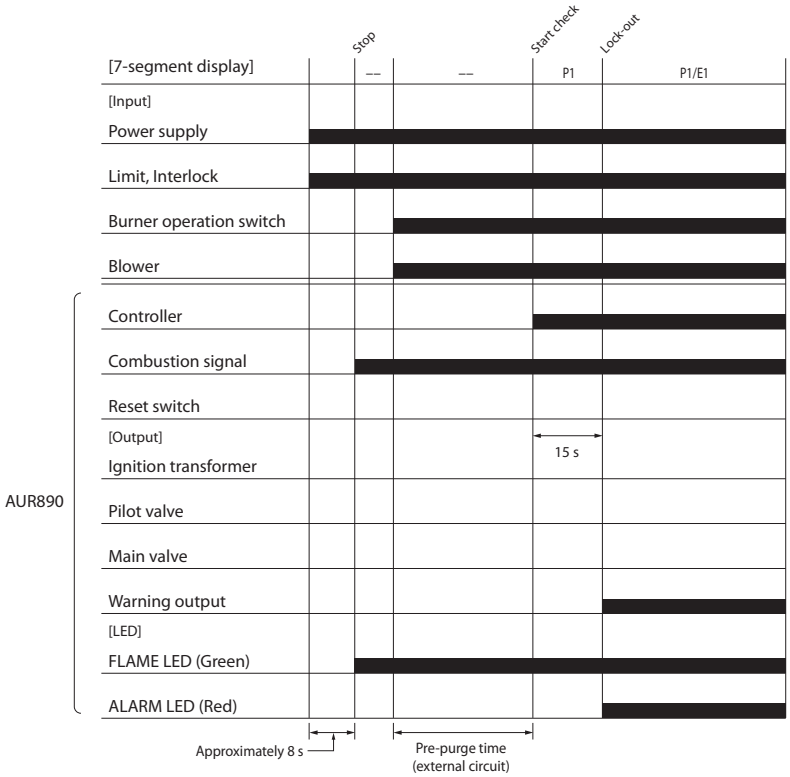

Input	AUR890 operation	Sequence codes	Operation of external devices
Power ON	When approximately 8 seconds have passed after the power has been turned on, the 7-segment LED display on the front panel of the AUR890 shows the sequence code [- -]. Because there was a false flame signal, the FLAME LED (green) on the front panel of the AUR890 lights up.	- -	
Burner operation switch ON		- -	When the burner operation switch is turned on, the blower starts to operate, and if the limit and interlock conditions are normal, a pre-purge is done. After the pre-purge, the pre-purge completion signal is turned ON. Blower: operating
External controller ON	If there is a false flame signal before the external controller turns ON, after the pre-purge completion signal and then the external controller turn ON, a false flame check is executed during the start check.	P1	
	If a false flame signal lasts for 15 seconds or longer, the AUR890 will be locked out, and relay K6 and the alarm output turn ON. Also, the ALARM LED (red) on the front panel of the AUR890 lights up.	P1/E1	Alarm output : ON

● Normal operation (Non-recycling oil-fired combustion (2-level combustion))

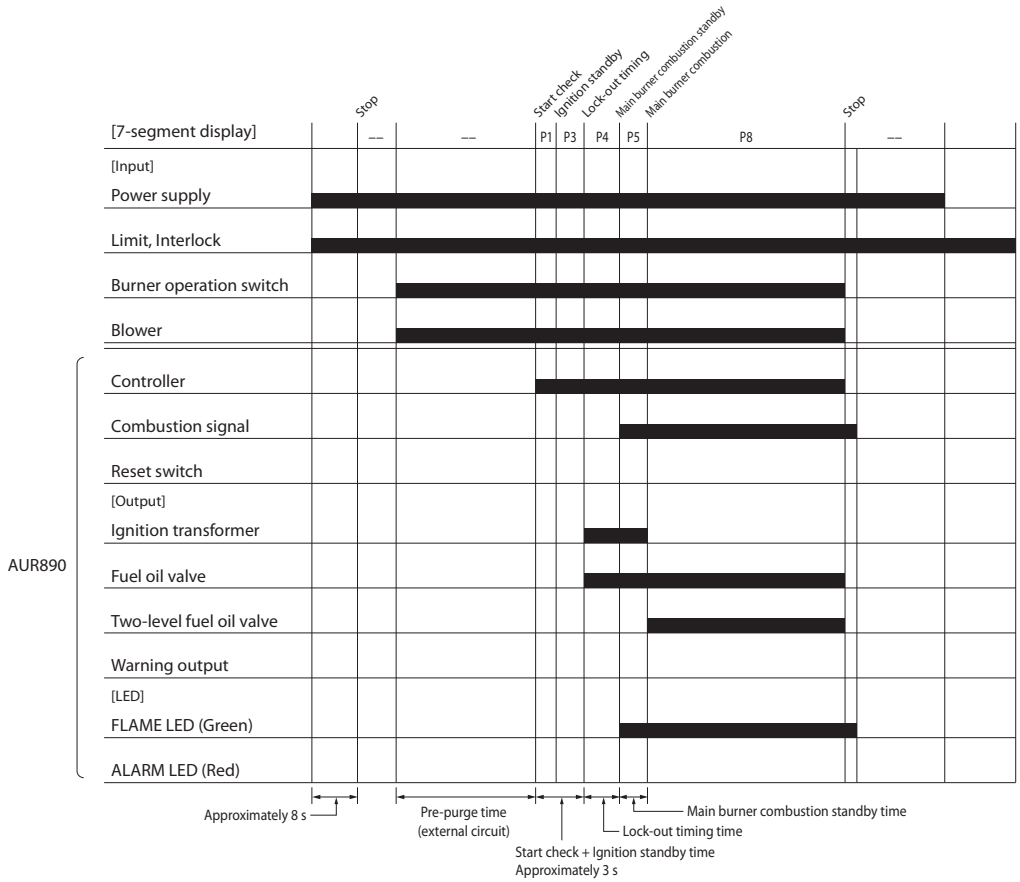

Input	AUR890 operation	Sequence codes	Operation of external devices
Power ON	When approximately 8 seconds have passed after the power has been turned on, the 7-segment LED display on the front panel of the AUR890 shows the sequence code [- -].	- -	
Burner operation switch ON		- -	When the burner operation switch is turned on, the blower starts to operate, and if the limit and interlock conditions are normal, a pre-purge is done. After the pre-purge, the pre-purge completion signal is turned ON. Blower: operating
External controller ON	If the pre-purge completion signal is ON and the external controller is ON, the internal circuits are checked during the start check.	P1	
	Afterward a false flame check is conducted during the ignition wait time.	P3	
	If the status is normal, the safety lockout time begins, relays K1, K2, K3 and K5 turn ON, the ignition transformer starts, and the fuel oil valve opens.	P4	Ignition transformer : start Fuel oil valve : open
	After the lockout time has passed, if a flame signal is detected, the ignition transformer output is maintained until the standby time for normal combustion has passed.	P5	Ignition transformer : continues operation Fuel oil valve : remains open
	When the flame sensor detects the flame from the fuel oil valve fuel, relay K5 turns OFF, the ignition transformer stops, relay K4 turns ON, the two-level fuel oil valve opens, and normal combustion begins. The FLAME LED (green) on the front panel of the AUR890 lights up.	P8	Ignition transformer : stop Two-level fuel oil valve : open
Burner operation switch OFF	When the burner operation switch is turned OFF, relays K1, K2, K3 and K4 turn OFF, and the fuel oil valve and two-level fuel oil valve close. The FLAME LED (green) on the front panel of the AUR890 turns off.	- -	Fuel oil valve : closed Two-level fuel oil valve : closed Blower : stop
Power OFF	When the power is turned OFF, the 7-segment LED display on the front panel of the AUR890 stops showing the sequence code [- -].		

⚠ WARNING

Do not connect the solenoid valve to the high potential side (L1). If it is connected to L1 and a ground fault occurs, current can leak to the solenoid valve and open it, allowing fuel to flow out, regardless of the status of the burner controller.

● Operation when an ignition failure occurs (Non-recycling oil-fired combustion (2-level combustion))

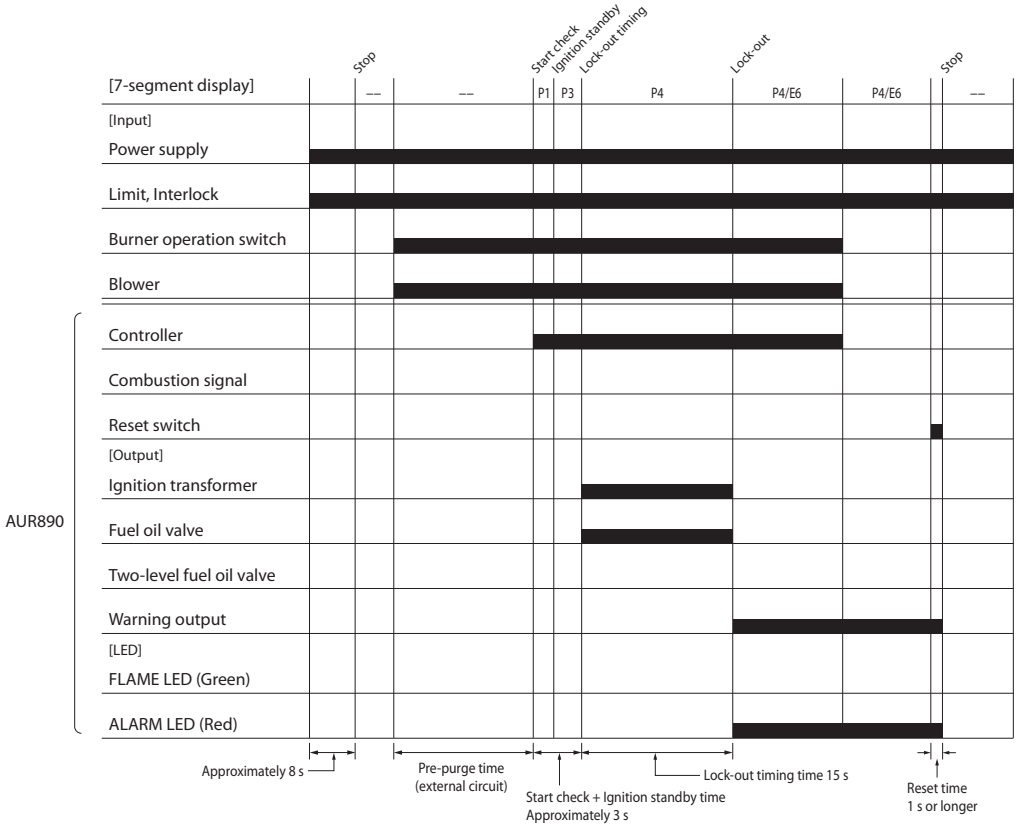

Input	AUR890 operation	Sequence codes	Operation of external devices
Power ON	When approximately 8 seconds have passed after the power has been turned on, the 7-segment LED display on the front panel of the AUR890 shows the sequence code [- -].	- -	
Burner operation switch ON		- -	When the burner operation switch is turned on, the blower starts to operate, and if the limit and interlock conditions are normal, a pre-purge is done. After the pre-purge, the pre-purge completion signal is turned ON. Blower: operating
External controller ON	If the pre-purge completion signal is ON and the external controller is ON, the internal circuits are checked during the start check.	P1	
	Afterward a false flame check is conducted during the ignition wait time.	P3	
	If the status is normal, the lockout time begins, relays K1, K2, K3 and K5 turn ON, the ignition transformer starts, the pilot valve begins to open, and external timer TM1 turns ON.	P4	Ignition transformer : start Fuel oil valve : open
	If the flame sensor does not detect a flame within the 15 seconds of lockout time, the AUR890 will be locked out so that relays K1, K2, K3, and K5 turn OFF, the ignition transformer stops operation, the fuel oil valve closes, relay K6 turns ON, and the alarm output turns ON. ALARM LED (red) on the front panel of the AUR890 turns on.	P4 / E6	Ignition transformer : stop Fuel oil valve : closed Alarm output : ON
Burner operation switch OFF		P4 / E6	Blower : stop
Reset Switch ON	Relay K6 turns OFF to turn OFF the alarm output. The ALARM LED (red) on the front panel of the AUR890 turns off.	- -	Alarm output : OFF

● Operation when a flame failure occurs (Non-recycling oil-fired combustion (2-level combustion))

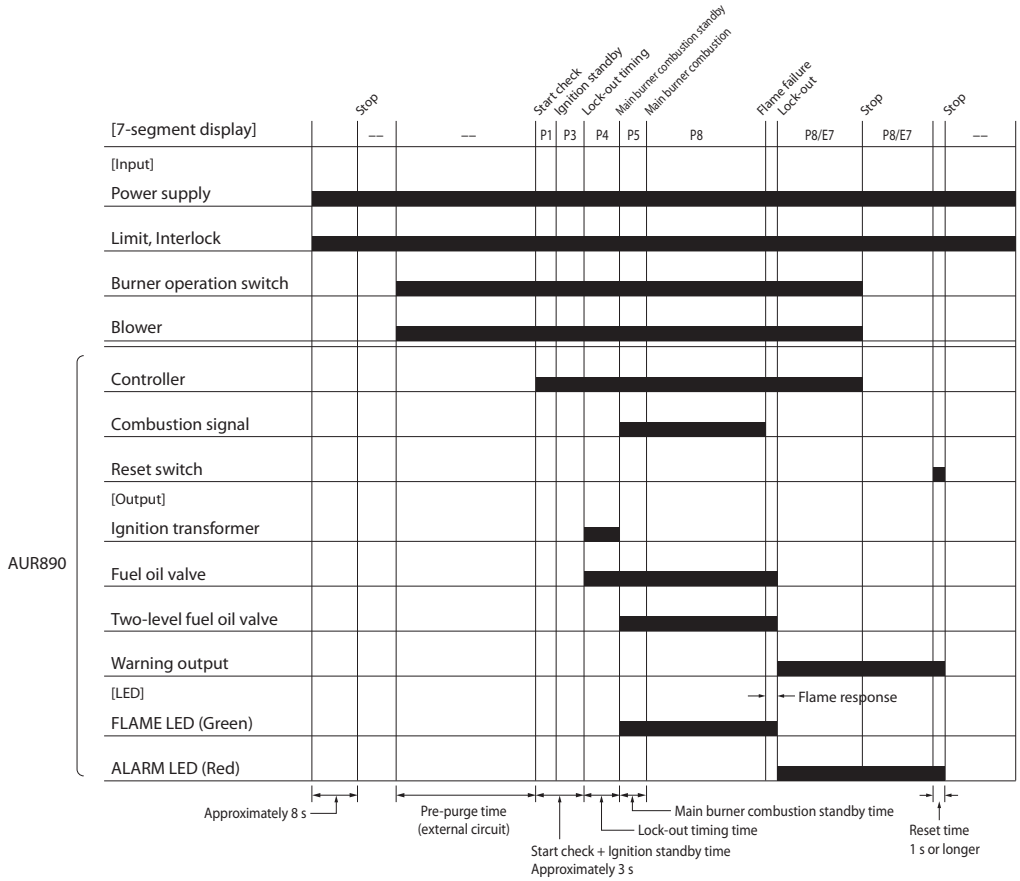

Input	AUR890 operation	Sequence codes	Operation of external devices
Power ON	When approximately 8 seconds have passed after the power has been turned on, the 7-segment LED display on the front panel of the AUR890 shows the sequence code [- -].	- -	
Burner operation switch ON		- -	When the burner operation switch is turned on, the blower starts to operate, and if the limit and interlock conditions are normal, a pre-purge is done. After the pre-purge, the pre-purge completion signal is turned ON. Blower: operating
External controller ON	If the pre-purge completion signal is ON and the external controller turns ON, the sequence that follows is start check, ignition standby, lockout time, standby for normal combustion, and normal combustion. The FLAME LED (green) on the front panel of the AUR890 lights up.	P8	Fuel oil valve : open Two-level fuel oil valve : open
	During normal combustion, if a flame failure of the burner occurs for some reason, after the flame failure response time has passed, the AUR890 will be locked out. At that time relays K1, K2, K3 and K4 turn OFF, the fuel oil valve and two-level fuel oil valve close, relay K6 turns ON, and the alarm output turns ON. The FLAME LED (green) on the front panel of the AUR890 turns off, and the ALARM LED (red) lights up.	P8 / E7	Fuel oil valve : closed Two-level fuel oil valve : closed Alarm output : ON
Burner operation switch OFF		P8 / E7	Blower : stop
Reset Switch ON	Relay K6 turns OFF to turn OFF the alarm output. The ALARM LED (red) on the front panel of the AUR890 turns off.	- -	Alarm output : OFF

● Operation when there is a false flame before start input (Non-recycling oil-fired combustion (2-level combustion))

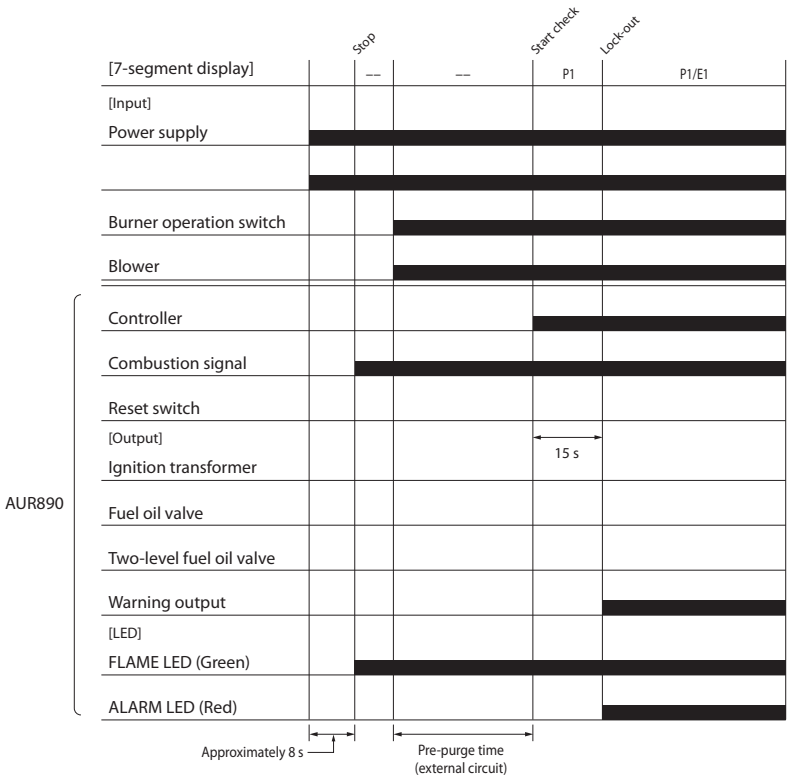

Input	AUR890 operation	Sequence codes	Operation of external devices
Power ON	When approximately 8 seconds have passed after the power has been turned on, the 7-segment LED display on the front panel of the AUR890 shows the sequence code [- -]. Because there was a false flame signal, the FLAME LED (green) on the front panel of the AUR890 lights up.	- -	
Burner operation switch ON		- -	When the burner operation switch is turned on, the blower starts to operate, and if the limit and interlock conditions are normal, a pre-purge is done. After the pre-purge, the pre-purge completion signal is turned ON. Blower: operating
External controller ON	If there is a false flame signal before the external controller turns ON, after the pre-purge completion signal and then the external controller turn ON, a false flame check is executed during the start check.	P1	
	If a false flame signal lasts for 15 seconds or longer, the AUR890 will be locked out, and relay K6 and the alarm output turn ON. Also, the ALARM LED (red) on the front panel of the AUR890 lights up.	P1/E1	Alarm output : ON

Chapter 5. Trial Operation and Adjustment

⚠ WARNING

- Make sure that the ignition times for the pilot and main burners do not exceed the ignition times specified by the burner or device manufacturer. Excessive ignition times may cause fuel to accumulate in the combustion chamber and form an explosive fuel-air mixture, which can result in a serious explosion hazard.
- Terminal 14 (F) retains an electrical charge even after the power is turned off. Do not touch terminal F even after turning the power off. Failure to do so may result in an electric shock.
- Do not operate this device without first completing calibration, testing, and combustion equipment manufacturer's tests.
- If lock-out occurs, make sure to execute a pre-purge before restarting. If unburned gas is not expelled from the combustion chamber and flue, there is a risk of an explosion during ignition.

⚠ CAUTION

- Mounting, wiring, maintenance, inspection, calibration, etc. should be carried out by a professional with technical training in combustion systems and combustion safety devices.
- The pilot turn-down test should be carried out by an experienced specialist possessing knowledge and skills pertaining to combustion equipment and combustion safety.

■ Preliminary inspection

(1) The temperature and humidity are within the ranges specified for operating conditions.

(2) There are no errors in wiring and terminal screws are not loose.

(3) The flame detector is installed correctly. (For the installation location, orientation, and other details, see the user's manual for the flame detector.)

(4) The burner is adjusted correctly.

(5) There are no obstructions, covers, or other items in the combustion air intake or exhaust outlet.

(6) The power supply voltage and frequency are the same as those shown on the device.

■ Inspection procedure

For safe operation of the combustion equipment, inspect the following items carefully and make appropriate adjustments.

■ Ignition spark response (UV sensor)

⚠ WARNING

- Ensure that the UV sensor does not detect ultraviolet rays other than those from the burner.
  If the UV sensor responds to other ultraviolet radiation, fuel will continue to be supplied even if the burner flame is off, potentially causing an explosion.
- Before doing the spark response test, always make sure that all manual fuel valves are closed.

(1) Close the manual valves in the piping for the pilot and main burners.

(2) Begin operation and measure the flame voltage during the ignition trail sequence to check for any effect from the ignition spark.

(3) If the spark has an effect, such as causing the FLAME LED to light up, refer to the user's manual for the equipment and make adjustments in the following way.

- Move the UV sensor or the ignition spark rod so that the spark does not affect the flame voltage.
- Attach a shield that prevents the spark's ultraviolet radiation from entering the optical path of the UV sensor. Adjust so that the spark's effect on the flame signal is 0.4 Vdc or less.
- In the case of a solid-state power semi-terminal drive igniter (S7200AxxxGHx or S720AxxxGHx), swap the polarity of the power to the igniter. When this device is used in combination with a half-wave drive igniter, changing the polarity of the power can prevent the the UV sensor's detection of the spark.

Handling Precautions

- Ensure that the UV sensor does not detect ultraviolet rays other than those from the burner flame.

Sources of ultraviolet radiation (other than the burner flame) that can activate the UV sensor include the following.

Examples:

Ultraviolet ray sources	1371 °C or hotter red-hot furnace wall (within 50 cm from wall)
	Ignition transformer, welding arc spark
	Gas laser
	Sun lamp
	Germicidal lamp, ultraviolet lamp, fluorescent lamp
	Strong flashlight (towards UV phototube)
Gamma ray and X-ray sources	X-ray analyzer, gamma ray analyzer/measurer
	Electron microscope
	X-ray machine
	High-voltage vacuum switch
	High-voltage capacitor
	Radioactive isotope
	Any other ultraviolet, gamma, or X-ray source

■ Measurement of flame voltage

This device shows the flame voltage on the 7-segment display. It can be checked by changing the display using the DISP switch on the front of the device.

Checking the flame voltage is the best way to determine whether or not the location of the flame detector is appropriate.

It should be checked during installation and servicing.

Checking it once per month or more can prevent shutdowns due to insufficient flame voltage.

Start the device and measure the voltage under various conditions, such as at startup and during normal operation.

Check to make sure that the flame voltage remains stable at 2.0 Vdc or more. The recommended flame voltage is 2.0 Vdc or more and it must be stable.

* If this stable voltage cannot be achieved, the problem may be caused by one or more of the following. In such a case, do a thorough inspection.

(1) The power supply voltage or frequency is not correct.

(2) The air supply pressure or air-fuel ratio is not correct.

(3) The flame detector is not correctly wired.

- Open circuit
- Short circuit
- High-resistance short circuit of the lead wires due to the temperature or dirt

(4) Incorrect flame monitoring direction (AUR890G)

(5) Dirty flame sensor surface (AUR890G).

(6) AUD15C tube unit deterioration (AUR890G).

(7) Incorrect flame rod installation (AUR890G).

- Area in contact with flame is insufficient.
- Position of flame rod in flame is incorrect.
- The flame rod insulator is at a high temperature (315 °C).
- Flame rod is affected by ignition transformer.

  If the ignition transformer is placed close to Terminal F of the flame rod, electrons in the flame are absorbed into the ignition transformer, and as a result, sufficient flame voltage cannot be achieved.

(Ref.) Correlation of flame output with that of older model

• AUR890G (AUD100/110/120)

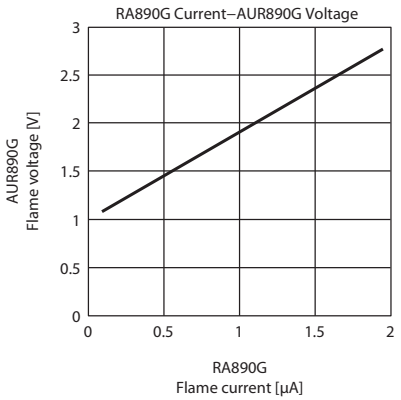

• AUR890F (flame rod)

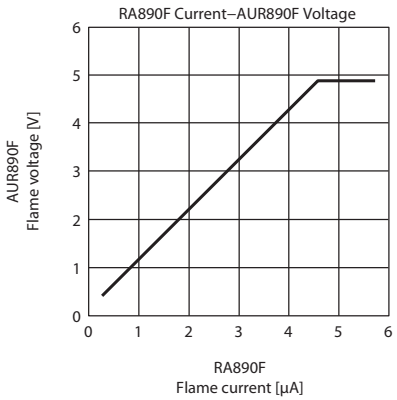

● Measurement method for flame voltage

The voltage can be checked on the 7-segment display or by connecting a flame meter to terminals 25 and 26 of the front connector.

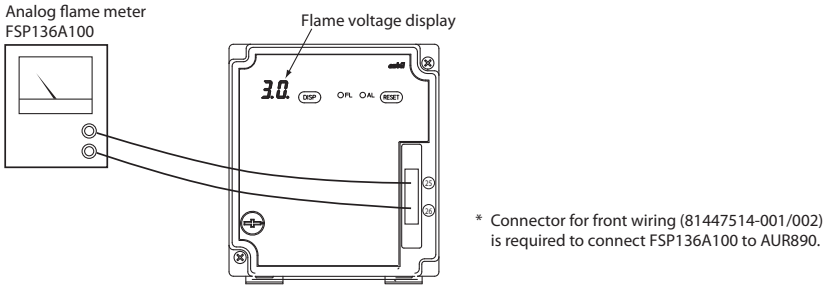

Handling Precautions

- For flame voltage output signal wires, use wire with indoor PVC insulation ("IV wire," JIS C3307) 0.75 mm^2. Wiring length cannot be more than 10 m.
- The input impedance of a measuring instrument used with this device must be 100 kΩ or more.

● Checking ignition time in a case where it is configured with an external timer

A flame failure can occur if an ignition attempt is made just before the ignition time expires.

This is because the supply of power to the pilot valve and main valve is interrupted for a moment if the time set for the external timer passes during the standby process for normal combustion and the external timer's contacts are reversed.

Whenever a flame is detected just before the ignition time has passed, ignition is delayed.

Adjust the burner so that it ignites reliably at least one second before the ignition time expires.

■ Pilot turn-down test

⚠ WARNING

- Make sure that the pilot turn-down test is done properly.
  If the flame detector is able to detect a pilot flame that is too small to ignite the main burner, and if there is a flame failure of the main burner, this device will not be able to recognize the flame failure. As a result, fuel will continue to be supplied, resulting in an explosion hazard.
- Before doing the pilot turn-down test, always make sure that all manual fuel valves are closed.
- If the pilot turn-down test must be repeated, stop the combustion equipment completely each time and discharge all of the unburned gas and oil from the fuel chamber and flue. Failure to discharge unburned gas may result in an explosion hazard.
- After completing the pilot turn-down test, turn off the power switch to turn off the power supply. Make sure to return all test jumpers and limit or controller settings to their original values. Resuming normal operation without returning the settings to their original values, etc., may damage the equipment or cause a gas leak or explosion.

⚠ CAUTION

- The pilot turn-down test should be carried out by an experienced specialist possessing knowledge and skills pertaining to combustion equipment and combustion safety.

The purpose of this test is to determine the smallest possible pilot flame that will reliably ignite the main burner.

Before and after this test, make sure to measure the flame voltage and confirm that it is 2.0 V or more.

(1) Turn off the power switch and stop all the equipment.

(2) Close the main valve (by removing one side of the wiring to the main valve or by closing the manual cock) to cut off the gas to the main burner. The pilot valve remains in its normal state.

(3) Turn on the power switch. If the start input is on, the ignition sequence begins after the pre-purge, as soon as the pilot valve is opened.

(4) After the pilot burner ignites, turn the pilot valve (manual cock) down until the burner controller extinguishes the flame. Mark the position of the manual cock at the time when the flame is extinguished. Then, press the reset switch to reset the error and restart it. Turn the manual cock back until just before the previously marked position (so that more gas is output).

(5) Turn off the power switch, return the main valve to the normal state and then turn on the power switch again. After the pre-purge, pilot burner combustion begins and then main burner combustion begins.
If the main burner does not ignite, turn off the power switch immediately.
The pilot flame is too small, so it must be increased. In that case, correct the installation location of the flame detector so that the monitoring angle of the flame detector is slightly away from the pilot flame monitoring axis.

Handling Precautions

- If it is necessary to repeat the test, each time it is repeated be sure to stop all the equipment first to prevent an explosion and then discharge all unburned gas that has accumulated in the combustion chamber and exhaust flue.

(6) Change the gas pressure from the minimum to the maximum and repeat steps (1) to (5) to check if the main burner ignites properly.

■ Safety shutoff check

(1) Interlock check
While the burner is operating, simulate the operation of each interlock and check if lock-out or shutdown occurs.
After checking, return the settings to their original values and restart the burner to check that it ignites normally.

(2) Ignition trail failure check
Close the manual gas cock. Turn on the start input of the burner to begin operation. After the pre-purge, an attempt is made to ignite the pilot burner. Since the manual cock is closed, however, the pilot burner does not ignite and lock-out occurs.
After confirming the above behavior, open the manual cock. Turn on the reset switch, restart the burner and check if it ignites normally.

(3) Flame failure check
Close the manual gas cock while the burner is operating. After the flame failure response time elapses, the pilot valve and main valve close and lock-out occurs.
After confirming the above behavior, open the manual cock. Turn on the reset switch, restart the burner and check if it ignites normally.

(4) Power loss (power failure) check
Turn off the power switch during burner operation in order to stop combustion. After waiting for a while, turn on the power switch again.
Then, turn on the start input, restart the burner and check if it ignites normally.

Chapter 6. Maintenance and Inspection

⚠ WARNING

- Ensure you turn off the power of this device and all auxiliary devices when mounting, removing or connecting the wires of this device.
  There is a risk of electrical shock.
- Terminal 14 (F) retains an electrical charge even after the power is turned off. Do not touch terminal 14 (F) even after turning the power off. Doing so may result in an electric shock.

⚠ CAUTION

- Mounting, wiring, maintenance, inspection, calibration, etc. should be carried out by a professional with technical training in combustion systems and combustion safety devices.
- If the device undergoes safety shutdown and restarts, do all of the inspection steps described in chapter 5, "Trial Operation and Adjustment."
- As part of the maintenance and inspection of the burner, make sure to do the pilot turn-down test. Inspect the burner at least once a year.
- Also, follow the instructions for periodic inspection that are given in the combustion equipment manufacturer's manual.
- When cleaning the burner, clean the flame detector also.

■ General maintenance and inspection

- When replacing this device, do all of the checks and adjustments, including those mentioned in the notices on page 1.
- Do not lubricate any part of this device.
- Remove any products of combustion that are stuck to the burner or other equipment.

■ Maintenance and inspection cycle

The maintenance and inspection cycle should take into consideration the device type, ambient conditions of the installation location, the frequency of use, etc. The following are approximate guidelines.

- Cleaning the burner: once or more per year
  After cleaning, make sure to do the pilot turn-down test.
- Burner shutdown check: once or more per month
- Flame voltage check: once or more per month

■ Alarm codes and details

When lock-out occurs, an alarm code is displayed automatically. When an alarm occurs, the sequence number and alarm code issued when the lock-out."

Alarm code	Sub-code	Description	Status
E1	None	False flame	The flame signal is detected for 15 s during pre-purge
E6		Ignition failure	Ignition was not detected during the lockout time.
E7		Flame failure	The flame signal disappeared during standby for normal combustion or thereafter.
E9	02	Switch input error	The DISP switch, RESET switch or reset input stayed on for 60 seconds. Note: Monitoring is continuous while power is supplied.
E9	03	Internal relay feedback (K1)	Relay K1 failure (contact welding) Note: If this error recurs even after a manual reset, a device failure may have occurred.
E9	05	Terminal 7 voltage discrepancy (PV)	At terminal 7, while pilot valve or main valve output was OFF, voltage was detected for 30 seconds. Note: This error can occur because of a ground fault, voltage supply to terminal 7 from an external circuit (bypass circuit, etc.), or relay K3 failure (contact welding, etc.).
E9	06	Terminal 8 voltage discrepancy (MV)	At terminal 8, while main valve output was OFF, voltage was detected for 30 seconds. Note: This error can occur because of a ground fault, voltage supply to terminal 8 from an external circuit (bypass circuit, etc.), or relay K4 failure (contact welding, etc.).
E9	07	Terminal 6 voltage discrepancy (IG)	At terminal 6, while the ignition transformer output was OFF, voltage was detected for 30 seconds. Note: This error can occur because of a ground fault, voltage supply to terminal 6 from an external circuit (bypass circuit, etc.), or relay K5 failure (contact welding, etc.).
E9	08	Alarm generation when power is turned ON	When the cause of lock-out cannot be identified • Power was turned off before CPU error judgment after lock-out occurred • Latch relay was set to lock-out due to vibration during transport or for other reasons
E9	50 to 70	Other problems	Device failure or malfunction due to external electrical noise * Check that there is no grounding failure, and that high-voltage cables and signal wires do not run together. If there is an inverter or the like that generates strong electrical noise near this device, take noise-suppression measures, referring to the user's manual for the noise-generating equipment. Note: If this error recurs even after a manual reset, a device failure may have occurred.

• If the sequence cannot be specified, the sequence code displayed when lockout occurred may be shown as [– –] (stopped).

■ Failure inspection flow

⚠ WARNING

Before removing, mounting, or wiring the module, be sure to turn OFF the power to the module and all connected devices. Failure to do so may result in an electric shock.

If there is any problem with the device, follow the inspection procedure below.
(Note: The terminal numbers are applicable in the case of the BC-R05A100 sub-base.)

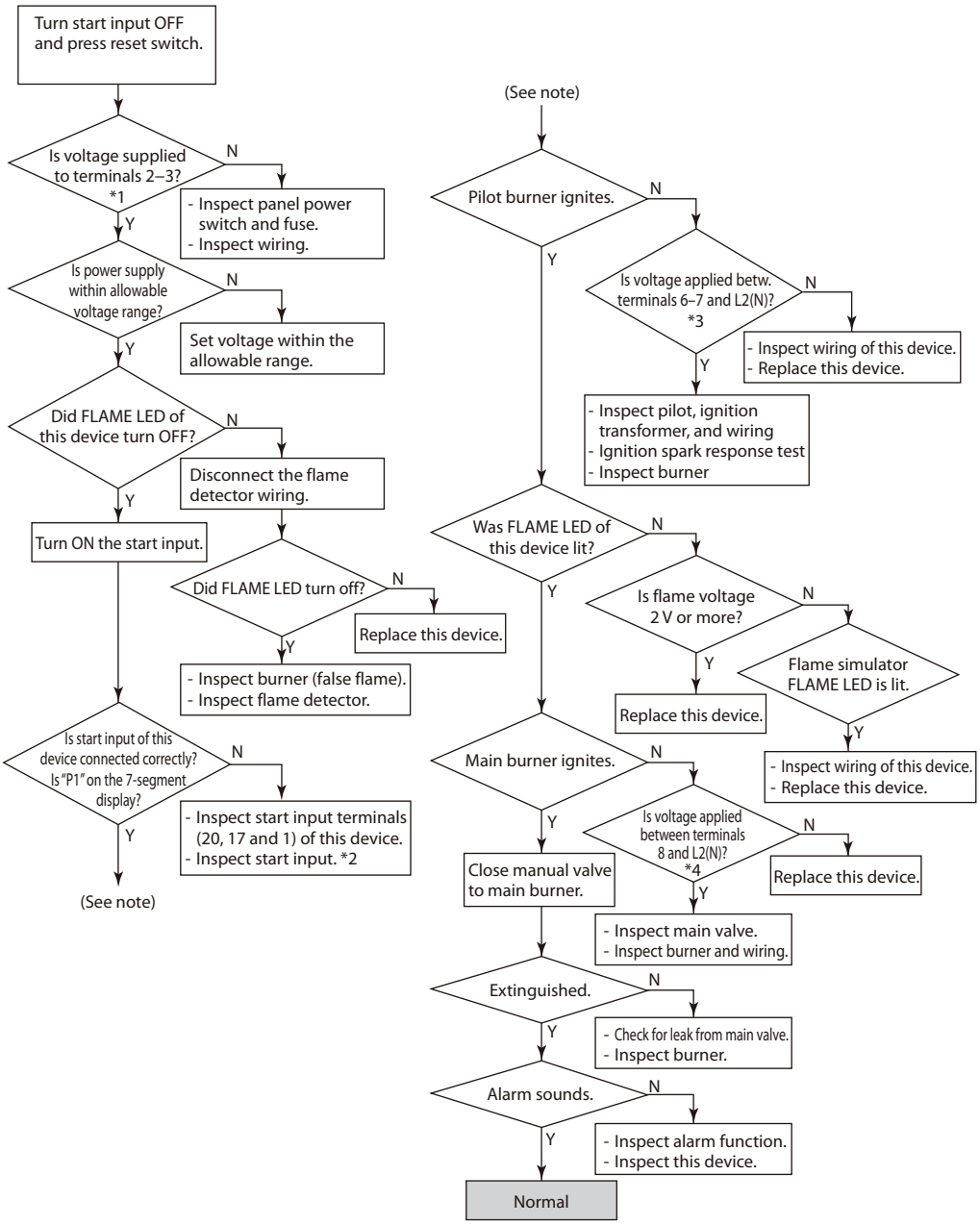

	Terminal numbers for Q890A100 replacement base unit
*1	Terminals 1 - 2
*2	Between terminals T - T or terminal 6
*3	Between terminals 3, 4 - L2(N)
*4	Between terminals 5 - L2(N)

Chapter 7. Specifications

Item		Description			
Application		Batch-operated combustion systems burning gas, oil, or gas/oil mixture			
Compatible flame detector		AUD100/110/120 series UV sensor, flame rod			
Sequence	Lock-out timing	13.5 ± 1.5 s			
	Standby for normal combustion	0.4 s			
	Flame failure response timing *1	AUD100/110/120 series UV sensor		Flame rod (Ionization)	
		3 ± 1 s (when flame voltage is 3 V)		1 s max (when flame voltage is 2 V)	
	Reset timing	1 s or longer (reset switch or contact reset input) *2			
	False flame detection time	15 s			
	Operation at ignition failure	Lock-out			
	Operation at flame failure	Lock-out			
Electrical specifications	Rated power supply	100 Vac or 200 Vac (depending on the model), 50 Hz or 60 Hz			
	Allowable power supply voltage	85-110 % of rated power supply			
	Power consumption	10 W or less			
	Dielectric strength	1500 Vac for 1 min, or 1800 Vac for 1 s Between each terminal and ground (the DIN rail clamp), except for combustion sensor connection terminals (terminals 14, 15)			
	Insulation resistance	50 MΩ min. with 500 Vdc megger Between each terminal and ground (the DIN rail clamp), except for combustion sensor connection terminals (terminals 14, 15)			
	Contact rating	Ignition transformer	Pilot valve	Main valve	Alarm
		300 VA	200 VA	200 VA	75 VA
	Flame detection level	AUD100/110/120 series UV sensor		Flame rod (Ionization)	
		Flame establishment: 1.5-4.5 Vdc Flame-out detection: 0.2-0.6 Vdc		Flame establishment: 1.5-4.5 Vdc Flame-out detection: 0.0-0.1 Vdc	
	Flame voltage output	Recommended flame voltage: Must be stable at 2 Vdc or above Flame voltage output range: 0.2-4.5 Vdc		Recommended flame voltage: Must be stable at 2 Vdc or above Flame voltage output range: 0.0 - 4.5 Vdc	
	External controller (for low voltage)	Non-voltage contact input, allowable contact resistance 500 Ω max.			
	Life	10 years when used for eight hours per day, or 100,000 start/stop cycles (at 25 °C, room humidity, rated voltage)			
Transportation and storage conditions	Ambient temperature	-20 to +70 °C			
	Ambient humidity	5-95 %RH (no condensation)			
	Vibration	0-9.8 m/s^2 (10-150 Hz, 1 octave/minute, 10 cycles, in each of XYZ directions)			
	Shock	0-300m/s^2			
	Package drop test	Height 60cm (free-fall test for 1 corner, 3 edges and six sides)			
Operating conditions	Ambient temperature	-20 to +60 °C			
	Ambient humidity	10-90 %RH (no condensation)			
	Vibration	0-3.2 m/s^2 (10-150 Hz, 1 octave/minute, 10 cycles, in each of XYZ directions)			
	Shock	0-9.8m/s^2			
	Mounting angle	Reference plane +/-10 °			
	Dust	0.3 mg/m^3 or less			
General specifications	Protection rating	IP40 (with sideboards (81447515-001) attached to the sub-base (BC-R05)) IP10 • When only the replacement base unit (Q890A100) is used • Sub-base (BC-R05) only			
	Overvoltage category	II			
	Pollution degree	PD2			
	Case color	Black			
	Case material	Denatured PPE resin (UL94-V0 PTI Material group IIIa)			

General specifications	Structure	Structure of the replacement base unit or sub-base and main unit
	Mounted orientation	Vertical or horizontal However, for horizontal attachment, 7 segment display can only be mounted so that it faces directly overhead (DIN rail mounting or direct mounting through base screw holes)
	Dimensions	• When used in combination with the replacement base unit (Q890A100) : W126 × H136 × D155 mm • When used in combination with the sub-base (BC-R05A100) : W95 × H105 × D110 mm
	Weight	Approximately 1200 g (When used in combination with the replacement base unit), Approximately 600 g (incl. sub-base)
Wiring types and max. wiring length		• External controller (for low voltage) 600 V PVC-insulated copper wire cable (“IV wire, ” JIS C3307), 1.25 mm^2, recommended length 20 m or less, max. wiring length 100 m • AUD100 Series (F, G) Copper IV wire with 600V vinyl insulation, 1.25 mm^2, maximum wiring length: 200m • Flame rod (F, G) RG-11U (JAN standard: US DoD compliant specification) Or equivalent 5C2V, 7C2V (JIS standard) Recommended condition: 20 m or less, maximum wiring length: 30 m • Flame voltage output signal circuit IV wire 0.75 mm^2 or larger, max. wiring length 10 m

*1 Selected by model number.
*2 The reset switch is ignored unless there is an alarm.

■ External dimensions

● AUR890 with the BC-R05A100 sub-base

(Unit: mm)

• **Body**

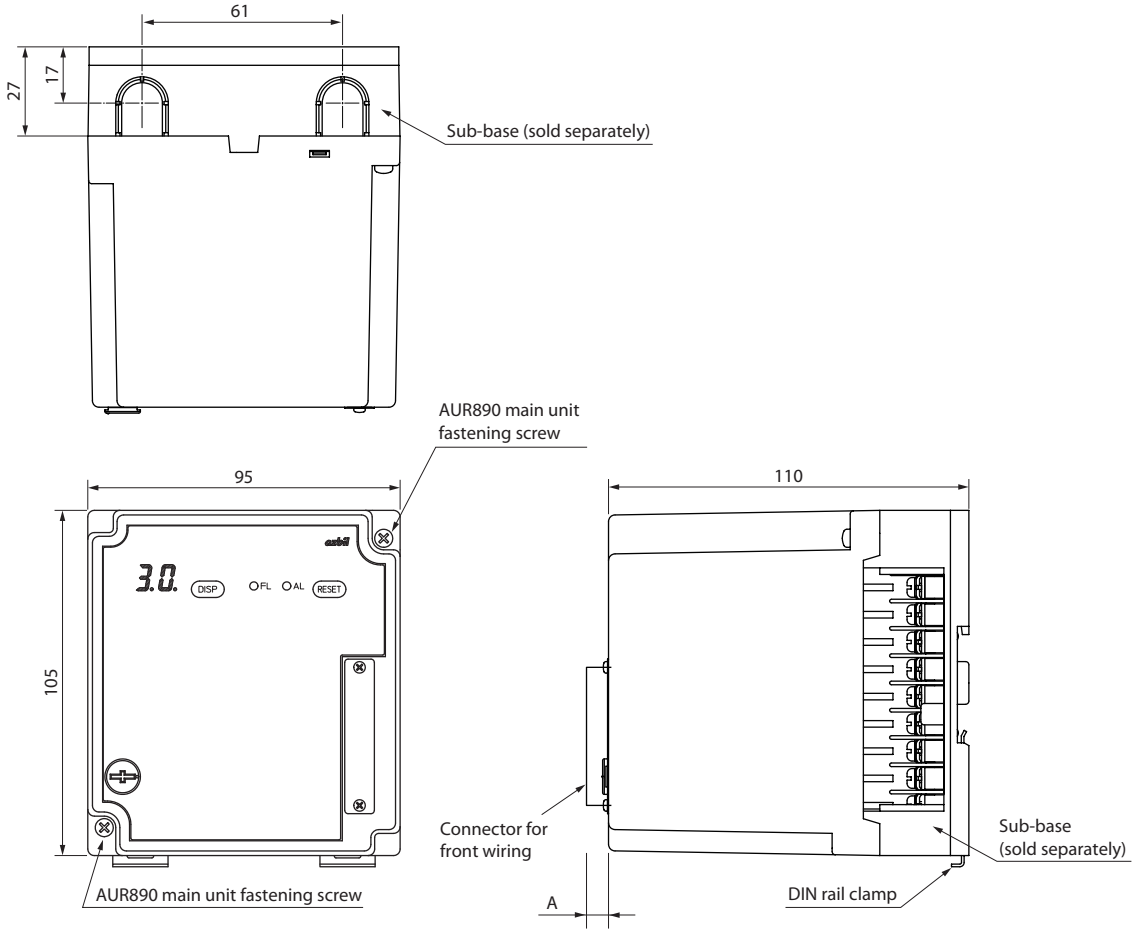

Model number	A
81447514-001	10.6
81447514-002	14.6

(Unit: mm)

• **Sub-base BC-R05A100 (sold separately)**

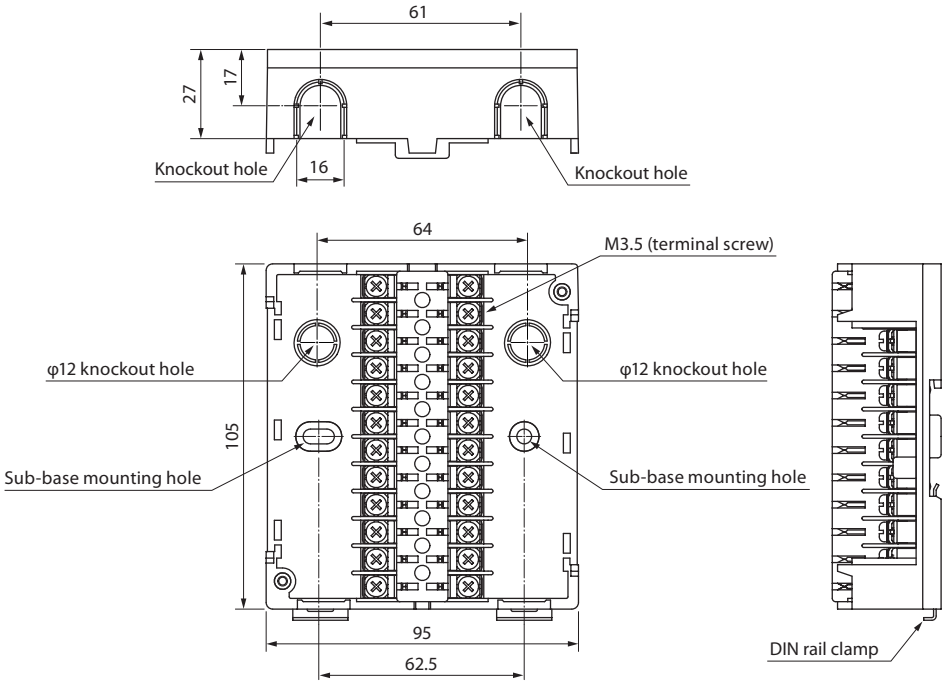

• **Sideboard 81447515-001 (sold separately)**

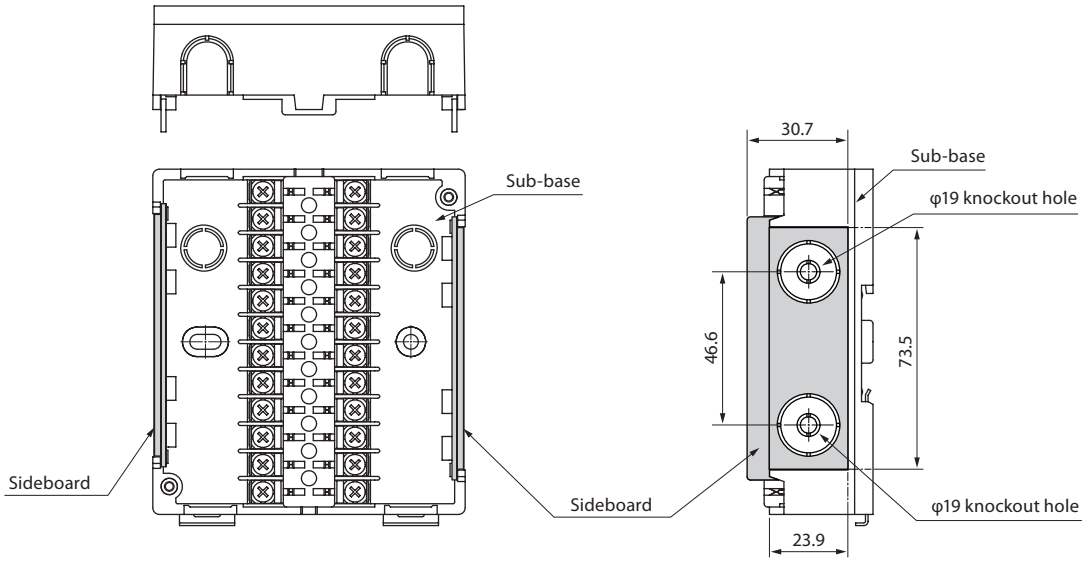

● When combined with the Q890A100 base unit for RA890-AUR890 replacement

(Unit: mm)

• **Body**

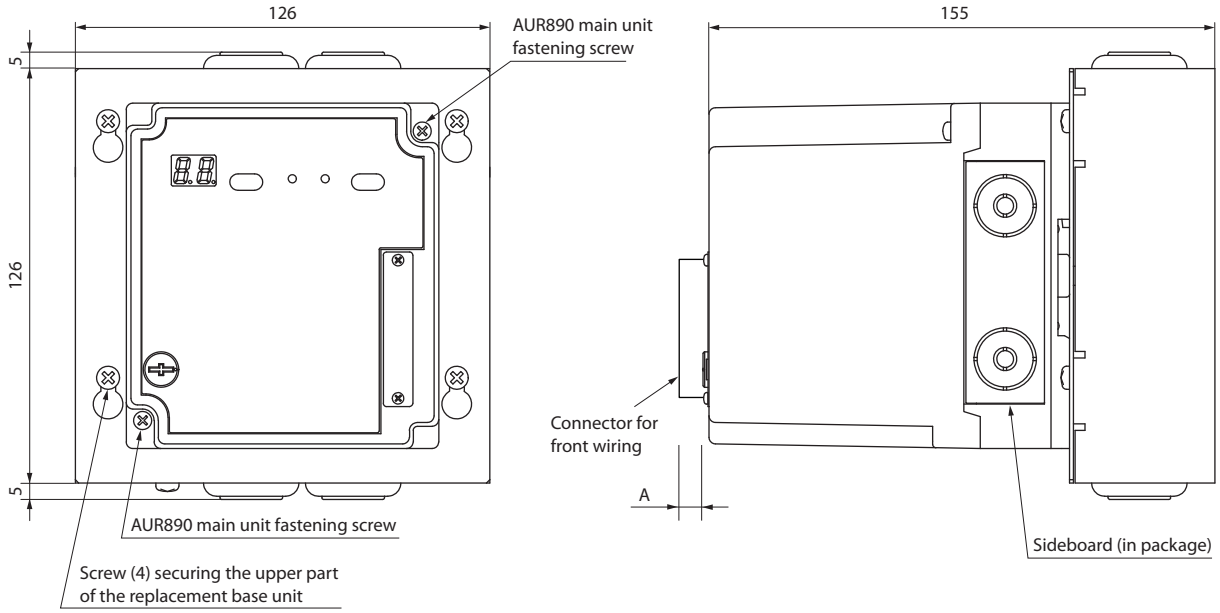

Model number	A
81447514-001	10.6
81447514-002	14.6

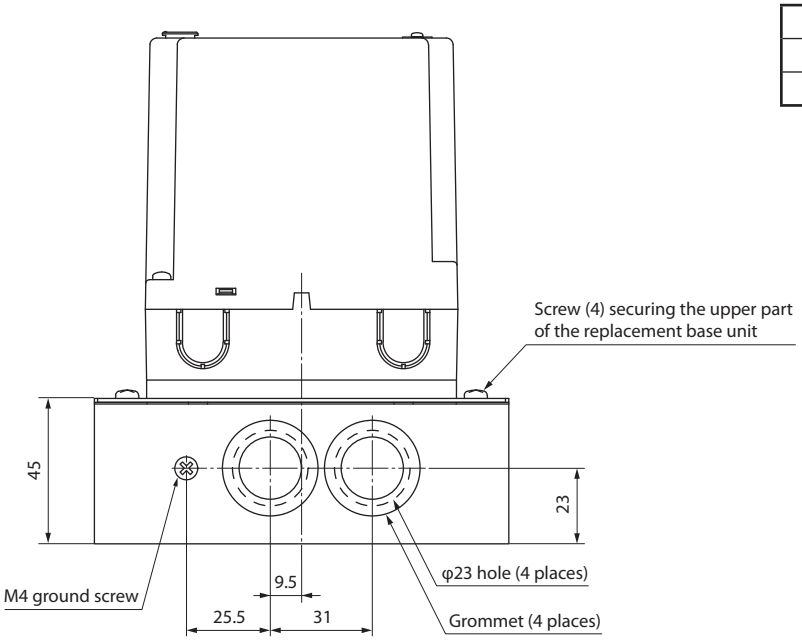

(Unit: mm)

• **With the base unit (Q890A100) for RA890 replacement (purchased separately)**

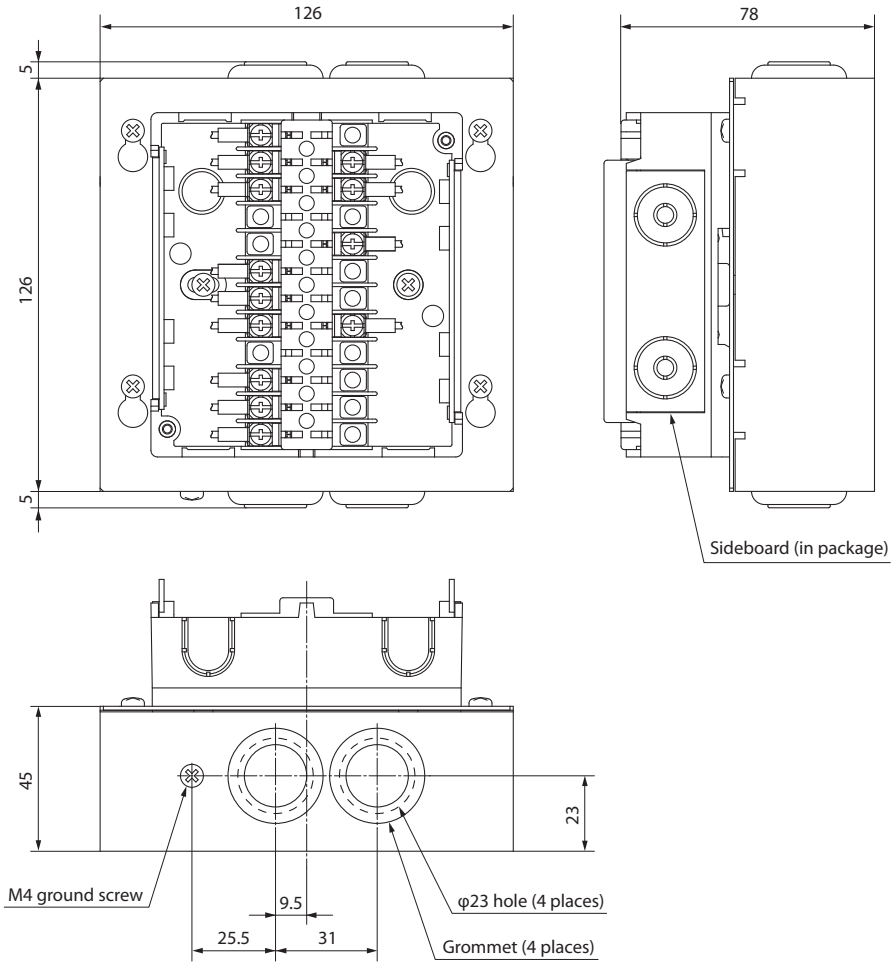

Revision History of CP-SP-1380E

Printed	Edn.	Revised pages	Description
Feb. 2015	**1**		

Terms and Conditions

We would like to express our appreciation for your purchase and use of Azbil Corporation's products.
You are required to acknowledge and agree upon the following terms and conditions for your purchase of Azbil Corporation's products (system products, field instruments, control valves, and control products), unless otherwise stated in any separate document, including, without limitation, estimation sheets, written agreements, catalogs, specifications and instruction manuals.

1. Warranty period and warranty scope

1.1 Warranty period

Azbil Corporation's products shall be warranted for one (1) year from the date of your purchase of the said products or the delivery of the said products to a place designated by you.

1.2 Warranty scope

In the event that Azbil Corporation's product has any failure attributable to azbil during the aforementioned warranty period, Azbil Corporation shall, without charge, deliver a replacement for the said product to the place where you purchased, or repair the said product and deliver it to the aforementioned place.
Notwithstanding the foregoing, any failure falling under one of the following shall not be covered under this warranty:

(1) Failure caused by your improper use of azbil product
(noncompliance with conditions, environment of use, precautions, etc. set forth in catalogs, specifications, instruction manuals, etc.);
(2) Failure caused for other reasons than Azbil Corporation's product;
(3) Failure caused by any modification or repair made by any person other than Azbil Corporation or Azbil Corporation's subcontractors;
(4) Failure caused by your use of Azbil Corporation's product in a manner not conforming to the intended usage of that product;
(5) Failure that the state-of-the-art at the time of Azbil Corporation's shipment did not allow Azbil Corporation to predict; or
(6) Failure that arose from any reason not attributable to Azbil Corporation, including, without limitation, acts of God, disasters, and actions taken by a third party.

Please note that the term "warranty" as used herein refers to equipment-only-warranty, and Azbil Corporation shall not be liable for any damages, including direct, indirect, special, incidental or consequential damages in connection with or arising out of Azbil Corporation's products.

2. Ascertainment of suitability

You are required to ascertain the suitability of Azbil Corporation's product in case of your use of the same with your machinery, equipment, etc. (hereinafter referred to as "Equipment") on your own responsibility, taking the following matters into consideration:

(1) Regulations and standards or laws that your Equipment is to comply with.
(2) Examples of application described in any documents provided by Azbil Corporation are for your reference purpose only, and you are required to check the functions and safety of your Equipment prior to your use.
(3) Measures to be taken to secure the required level of the reliability and safety of your Equipment in your use
Although azbil is constantly making efforts to improve the quality and reliability of Azbil Corporation's products, there exists a possibility that parts and machinery may break down.
You are required to provide your Equipment with safety design such as fool-proof design, *1 and fail-safe design*2 (anti-flame propagation design, etc.), whereby preventing any occurrence of physical injuries, fires, significant damage, and so forth. Furthermore, fault avoidance, *3 fault tolerance,*4 or the like should be incorporated so that the said Equipment can satisfy the level of reliability and safety required for your use.

*1. A design that is safe even if the user makes an error.
*2. A design that is safe even if the device fails.
*3. Avoidance of device failure by using highly reliable components, etc.
*4. The use of redundancy.

3. Precautions and restrictions on application

Azbil Corporation's products other than those explicitly specified as applicable (e.g. azbil Limit Switch For Nuclear Energy) shall not be used in a nuclear energy controlled area (radiation controlled area).
Any Azbil Corporation's products shall not be used for/with medical equipment.
The products are for industrial use. Do not allow general consumers to install or use any Azbil Corporation's product. However, azbil products can be incorporated into products used by general consumers. If you intend to use a product for that purpose, please contact one of our sales representatives.
In addition,
you are required to conduct a consultation with our sales representative and understand detail specifications, cautions for operation, and so forth by reference to catalogs, specifications, instruction manual, etc. in case that you intend to use azbil product for any purposes specified in (1) through (6) below.
Moreover, you are required to provide your Equipment with fool-proof design, fail-safe design, anti-flame propagation design, fault avoidance, fault tolerance, and other kinds of protection/safety circuit design on your own responsibility to ensure reliability and safety, whereby preventing problems caused by failure or nonconformity.

(1) For use under such conditions or in such environments as not stated in technical documents, including catalogs, specification, and instruction manuals
(2) For use of specific purposes, such as:
* Nuclear energy/radiation related facilities
[For use outside nuclear energy controlled areas] [For use of Azbil Corporation's Limit Switch For Nuclear Energy]
* Machinery or equipment for space/sea bottom
* Transportation equipment
[Railway, aircraft, vessels, vehicle equipment, etc.]
* Antidisaster/crime-prevention equipment

* Burning appliances
* Electrothermal equipment
* Amusement facilities
* Facilities/applications associated directly with billing

(3) Supply systems such as electricity/gas/water supply systems, large-scale communication systems, and traffic/air traffic control systems requiring high reliability
(4) Facilities that are to comply with regulations of governmental/public agencies or specific industries
(5) Machinery or equipment that may affect human lives, human bodies or properties
(6) Other machinery or equipment equivalent to those set forth in items (1) to (5) above which require high reliability and safety

4. Precautions against long-term use

Use of Azbil Corporation's products, including switches, which contain electronic components, over a prolonged period may degrade insulation or increase contact-resistance and may result in heat generation or any other similar problem causing such product or switch to develop safety hazards such as smoking, ignition, and electrification.
Although acceleration of the above situation varies depending on the conditions or environment of use of the products, you are required not to use any Azbil Corporation's products for a period exceeding ten (10) years unless otherwise stated in specifications or instruction manuals.

5. Recommendation for renewal

Mechanical components, such as relays and switches, used for Azbil Corporation's products will reach the end of their life due to wear by repetitious open/close operations.
In addition, electronic components such as electrolytic capacitors will reach the end of their life due to aged deterioration based on the conditions or environment in which such electronic components are used.
Although acceleration of the above situation varies depending on the conditions or environment of use, the number of open/close operations of relays, etc. as prescribed in specifications or instruction manuals, or depending on the design margin of your machine or equipment, you are required to renew any Azbil Corporation's products every 5 to 10 years unless otherwise specified in specifications or instruction manuals.
System products, field instru ments (sensors such as pressure/flow/level sensors, regulating valves, etc.) will reach the end of their life due to aged deterioration of parts.
For those parts that will reach the end of their life due to aged deterioration, recommended replacement cycles are prescribed. You are required to replace parts based on such recommended replacement cycles.

6. Other precautions

Prior to your use of Azbil Corporation's products, you are required to understand and comply with specifications (e.g., conditions and environment of use), precautions, warnings/cautions/notices as set forth in the technical documents prepared for individual Azbil Corporation's products, such as catalogs, specifications, and instruction manuals to ensure the quality, reliability, and safety of those products.

7. Changes to specifications

Please note that the descriptions contained in any documents provided by azbil are subject to change without notice for improvement or for any other reason.
For inquires or information on specifications as you may need to check, please contact our branch offices or sales offices, or your local sales agents.

8. Discontinuance of the supply of products/parts

Please note that the production of any Azbil Corporation's product may be discontinued without notice.
For repairable products, we will, in principle, undertake repairs for five (5) years after the discontinuance of those products. In some cases, however, we cannot undertake such repairs for reasons, such as the absence of repair parts.
For system products, field instruments, we may not be able to undertake parts replacement for similar reasons.

9. Scope of services

Prices of Azbil Corporation's products do not include any charges for services such as engineer dispatch service.
Accordingly, a separate fee will be charged in any of the following cases:

(1) Installation, adjustment, guidance, and attendance at a test run
(2) Maintenance, inspection, adjustment, and repair
(3) Technical guidance and technical education
(4) Special test or special inspection of a product under the conditions specified by you

Please note that we cannot provide any services as set forth above in a nuclear energy controlled area (radiation controlled area) or at a place where the level of exposure to radiation is equivalent to that in a nuclear energy controlled area.

Azbil Corporation
Advanced Automation Company

1-12-2 Kawana, Fujisawa
Kanagawa 251-8522 Japan

URL: http://www.azbil.com

Specifications are subject to change without notice. (09)

1st edition: Feb. 2015 (K)